Courtesy of CMA/Flodyne/Hydradyne ▪ Motion Control ▪ Hydraulic ▪ Pneumatic ▪ Electrical ▪ Mechanical ▪ (800) 426-5480 ▪ www.cmafh.com

Electric Drives and Controls | Hydraulics | Linear Motion and Assembly Technologies | Pneumatics | Service

Rexroth
Bosch Group

Rexroth IndraDrive Mi
Electronic Control System KCU02

R911335787
Edition 01

Instruction Manual

Courtesy of CMA/Flodyne/Hydradyne ▪ Motion Control ▪ Hydraulic ▪ Pneumatic ▪ Electrical ▪ Mechanical ▪ (800) 426-5480 ▪ www.cmafh.com

Title Rexroth IndraDrive Mi
Electronic Control System KCU02

Type of Documentation Instruction Manual

Document Typecode DOK-INDRV*-KCU02*UL***-IN01-EN-P

Internal File Reference RS-e9f60dc040b6e4f60a6846a500c3c70f-1-en-US-2

Record of Revision

Edition	Release Date	Notes
DOK-INDRV*-KCU02*UL***-IN01-EN-P	2012/03	First edition

Purpose of Documentation This documentation provides information on the installation and operation of the described products, by persons trained and qualified to work with electrical installations.

Copyright © Bosch Rexroth AG 2012

This document, as well as the data, specifications and other information set forth in it, are the exclusive property of Bosch Rexroth AG. It may not be reproduced or given to third parties without its consent.

Liability The specified data is intended for product description purposes only and shall not be deemed to be a guaranteed characteristic unless expressly stipulated in the contract. All rights are reserved with respect to the content of this documentation and the availability of the product.

Published by Bosch Rexroth AG
Bgm.-Dr.-Nebel-Str. 2 ■ 97816 Lohr a. Main, Germany
Phone +49 9352 18 0 ■ Fax +49 9352 18 8400
http://www.boschrexroth.com/
DC-IA/EDY4 (CR)

Courtesy of CMA/Flodyne/Hydradyne ▪ Motion Control ▪ Hydraulic ▪ Pneumatic ▪ Electrical ▪ Mechanical ▪ (800) 426-5480 ▪ www.cmafh.com

D Deutsch	USA English	F Français
⚠WARNUNG Lebensgefahr bei Nichtbeachtung der nachstehenden Sicherheitshinweise! Nehmen Sie die Produkte erst dann in Betrieb, nachdem Sie die mit dem Produkt gelieferten Unterlagen und Sicherheitshinweise vollständig durchgelesen, verstanden und beachtet haben. Sollten Ihnen keine Unterlagen in Ihrer Landessprache vorliegen, wenden Sie sich an Ihren zuständigen Rexroth-Vertriebspartner. Nur qualifiziertes Personal darf an Antriebskomponenten arbeiten. Nähere Erläuterungen zu den Sicherheitshinweisen entnehmen Sie Kapitel 1 dieser Dokumentation.	**⚠WARNING Danger to life in case of non-compliance with the below-mentioned safety instructions!** Do not attempt to install or put these products into operation until you have completely read, understood and observed the documents supplied with the product. If no documents in your language were supplied, please consult your Rexroth sales partner. Only qualified persons may work with drive components. For detailed explanations on the safety instructions, see chapter 1 of this documentation.	**⚠AVERTISSEMENT Danger de mort en cas de non-respect des consignes de sécurité figurant ci-après !** Ne mettez les produits en service qu'après avoir lu complètement et après avoir compris et respecté les documents et les consignes de sécurité fournis avec le produit. Si vous ne disposez pas de la documentation dans votre langue, merci de consulter votre partenaire Rexroth. Seul un personnel qualifié est autorisé à travailler sur les composants d'entraînement. Vous trouverez des explications plus détaillées relatives aux consignes de sécurité au chapitre 1 de la présente documentation.
⚠WARNUNG Hohe elektrische Spannung! Lebensgefahr durch elektrischen Schlag! Betreiben Sie Antriebskomponenten nur mit fest installiertem Schutzleiter. Schalten Sie vor Zugriff auf Antriebskomponenten die Spannungsversorgung aus. Beachten Sie die Entladezeiten von Kondensatoren.	**⚠WARNING High electrical voltage! Danger to life by electric shock!** Only operate drive components with a permanently installed equipment grounding conductor. Disconnect the power supply before accessing drive components. Observe the discharge times of the capacitors.	**⚠AVERTISSEMENT Tensions électriques élevées ! Danger de mort par électrocution !** N'exploitez les composants d'entraînement que si un conducteur de protection est installé de manière permanente. Avant d'intervenir sur les composants d'entraînement, coupez toujours la tension d'alimentation. Tenez compte des délais de décharge de condensateurs.
⚠WARNUNG Gefahrbringende Bewegungen! Lebensgefahr! Halten Sie sich nicht im Bewegungsbereich von Maschinen und Maschinenteilen auf. Verhindern Sie den unbeabsichtigten Zutritt für Personen. Bringen Sie vor dem Zugriff oder Zutritt in den Gefahrenbereich die Antriebe sicher zum Stillstand.	**⚠WARNING Dangerous movements! Danger to life!** Keep free and clear of the ranges of motion of machines and moving machine parts. Prevent personnel from accidentally entering the range of motion of machines. Make sure that the drives are brought to safe standstill before accessing or entering the danger zone.	**⚠AVERTISSEMENT Mouvements entraînant une situation dangereuse ! Danger de mort !** Ne séjournez pas dans la zone de mouvement de machines et de composants de machines. Évitez tout accès accidentel de personnes. Avant toute intervention ou tout accès dans la zone de danger, assurez-vous de l'arrêt préalable de tous les entraînements.
⚠WARNUNG Elektromagnetische / magnetische Felder! Gesundheitsgefahr für Personen mit Herzschrittmachern, metallischen Implantaten oder Hörgeräten! Zutritt zu Bereichen, in denen Antriebskomponenten montiert und betrieben werden, ist für oben genannten Personen untersagt bzw. nur nach Rücksprache mit einem Arzt erlaubt.	**⚠WARNING Electromagnetic / magnetic fields! Health hazard for persons with heart pacemakers, metal implants or hearing aids!** The above-mentioned persons are not allowed to enter areas in which drive components are mounted and operated, or rather are only allowed to do this after they consulted a doctor.	**⚠AVERTISSEMENT Champs électromagnétiques / magnétiques ! Risque pour la santé des porteurs de stimulateurs cardiaques, d'implants métalliques et d'appareils auditifs !** L'accès aux zones où sont montés et exploités les composants d'entraînement est interdit aux personnes susmentionnées ou bien ne leur est autorisé qu'après consultation d'un médecin.
⚠VORSICHT Heiße Oberflächen (> 60 °C)! Verbrennungsgefahr! Vermeiden Sie das Berühren von metallischen Oberflächen (z. B. Kühlkörpern). Abkühlzeit der Antriebskomponenten einhalten (mind. 15 Minuten).	**⚠CAUTION Hot surfaces (> 60 °C [140 °F])! Risk of burns!** Do not touch metallic surfaces (e.g. heat sinks). Comply with the time required for the drive components to cool down (at least 15 minutes).	**⚠ATTENTION Surfaces chaudes (> 60 °C)! Risque de brûlure !** Évitez de toucher des surfaces métalliques (p. ex. dissipateurs thermiques). Respectez le délai de refroidissement des composants d'entraînement (au moins 15 minutes).

Courtesy of CMA/Flodyne/Hydradyne ▪ Motion Control ▪ Hydraulic ▪ Pneumatic ▪ Electrical ▪ Mechanical ▪ (800) 426-5480 ▪ www.cmafh.com

D Deutsch	USA English	F Français
⚠VORSICHT Unsachgemäße Handhabung bei Transport und Montage! Verletzungsgefahr! Verwenden Sie geeignete Montage- und Transporteinrichtungen. Benutzen Sie geeignetes Werkzeug und persönliche Schutzausrüstung.	**⚠CAUTION Improper handling during transport and mounting! Risk of injury!** Use suitable equipment for mounting and transport. Use suitable tools and personal protective equipment.	**⚠ATTENTION Manipulation incorrecte lors du transport et du montage ! Risque de blessure !** Utilisez des dispositifs de montage et de transport adéquats. Utilisez des outils appropriés et votre équipement de protection personnel.
⚠VORSICHT Unsachgemäße Handhabung von Batterien! Verletzungsgefahr! Versuchen Sie nicht, leere Batterien zu reaktivieren oder aufzuladen (Explosions- und Verätzungsgefahr). Zerlegen oder beschädigen Sie keine Batterien. Werfen Sie Batterien nicht ins Feuer.	**⚠CAUTION Improper handling of batteries! Risk of injury!** Do not attempt to reactivate or recharge low batteries (risk of explosion and chemical burns). Do not dismantle or damage batteries. Do not throw batteries into open flames.	**⚠ATTENTION Manipulation incorrecte de piles! Risque de blessure!** N'essayez pas de réactiver des piles vides ou de les charger (risque d'explosion et de brûlure par acide). Ne désassemblez et n'endommagez pas les piles. Ne jetez pas des piles dans le feu.

E Español	P Português	I Italiano
⚠ADVERTENCIA ¡Peligro de muerte en caso de no observar las siguientes indicaciones de seguridad! Los productos no se pueden poner en servicio hasta después de haber leído por completo, comprendido y tenido en cuenta la documentación y las advertencias de seguridad que se incluyen en la entrega. Si no dispusiera de documentación en el idioma de su país, diríjase a su distribuidor competente de Rexroth. Solo el personal debidamente cualificado puede trabajar en componentes de accionamiento. Encontrará más detalles sobre las indicaciones de seguridad en el capítulo 1 de esta documentación.	**⚠ATENÇÃO Perigo de vida em caso de inobservância das seguintes instruções de segurança!** Utilize apenas os produtos depois de ter lido, compreendido e tomado em consideração a documentação e as instruções de segurança fornecidas juntamente com o produto. Se não tiver disponível a documentação na sua língua, dirija-se ao seu parceiro de venda responsável da Rexroth. Apenas pessoal qualificado pode trabalhar nos componentes de acionamento. Explicações mais detalhadas relativamente às instruções de segurança constam no capítulo 1 desta documentação.	**⚠AVVERTENZA Pericolo di morte in caso di inosservanza delle seguenti indicazioni di sicurezza!** Mettere in funzione i prodotti solo dopo aver letto, compreso e osservato per intero la documentazione e le indicazioni di sicurezza fornite con il prodotto. Se non dovesse essere presente la documentazione nella vostra lingua, siete pregati di rivolgervi al rivenditore Rexroth competente. Solo personale qualificato può eseguire lavori sui componenti di comando. Per ulteriori spiegazioni riguardanti le indicazioni di sicurezza consultare il capitolo 1 di questa documentazione.
⚠ADVERTENCIA ¡Alta tensión eléctrica! ¡Peligro de muerte por descarga eléctrica! Active sólo los componentes de accionamiento con el conductor protector firmemente instalado. Desconecte la alimentación eléctrica antes de manipular los componentes de accionamiento. Tenga en cuenta los tiempos de descarga de los condensadores.	**⚠ATENÇÃO Alta tensão elétrica! Perigo de vida devido a choque elétrico!** Opere componentes de acionamento apenas com condutores de proteção instalados. Desligue a alimentação de tensão antes de aceder aos componentes de acionamento. Respeite os períodos de descarga dos condensadores.	**⚠AVVERTENZA Alta tensione elettrica! Pericolo di morte in seguito a scosse elettriche!** Mettere in esercizio i componenti di comando solo con conduttore di messa a terra ben installato. Staccare l'alimentazione prima di intervenire sui componenti di comando. Osservare i tempi di scarica del condensatore.
⚠ADVERTENCIA ¡Movimientos peligrosos! ¡Peligro de muerte! No permanezca en la zona de movimiento de las máquinas ni de sus piezas. Impida el acceso accidental de personas. Antes de acceder o introducir las manos en la zona de peligro, los accionamientos se tienen que haber parado con seguridad.	**⚠ATENÇÃO Movimentos perigosos! Perigo de vida!** Não permaneça na área de movimentação das máquinas e das peças das máquinas. Evite o acesso involuntário para pessoas. Antes de entrar ou aceder à área perigosa, imobilize os acionamentos de forma segura.	**⚠AVVERTENZA Movimenti pericolosi! Pericolo di morte!** Non sostare nelle zone di manovra delle macchine e delle loro parti. Impedire un accesso non autorizzato per le persone. Prima di accedere alla zona di pericolo, arrestare e bloccare gli azionamenti.

Courtesy of CMA/Flodyne/Hydradyne ▪ Motion Control ▪ Hydraulic ▪ Pneumatic ▪ Electrical ▪ Mechanical ▪ (800) 426-5480 ▪ www.cmafh.com

E Español	P Português	I Italiano
⚠ ADVERTENCIA ¡Campos electromagnéticos/magnéticos! ¡Peligro para la salud de las personas con marcapasos, implantes metálicos o audífonos! El acceso de las personas arriba mencionadas a las zonas de montaje o funcionamiento de los componentes de accionamiento está prohibido, salvo que lo autorice previamente un médico.	**⚠ ATENÇÃO Campos eletromagnéticos / magnéticos! Perigo de saúde para pessoas com marcapassos, implantes metálicos ou aparelhos auditivos!** Acesso às áreas, nas quais os componentes de acionamento são montados e operados, é proibido para as pessoas em cima mencionadas ou apenas após permissão de um médico.	**⚠ AVVERTENZA Campi elettromagnetici / magnetici! Pericolo per la salute delle persone portatrici di pacemaker, protesi metalliche o apparecchi acustici!** L'accesso alle zone in cui sono installati o in funzione componenti di comando è vietato per le persone sopra citate o consentito solo dopo un colloquio con il medico.
⚠ ATENCIÓN ¡Superficies calientes (> 60 °C)! ¡Peligro de quemaduras! Evite el contacto con las superficies calientes (p. ej., disipadores de calor). Observe el tiempo de enfriamiento de los componentes de accionamiento (mín. 15 minutos).	**⚠ CUIDADO Superfícies quentes (> 60 °C)! Perigo de queimaduras!** Evite tocar superfícies metálicas (p. ex. radiadores). Respeite o tempo de arrefecimento dos componentes de acionamento (mín. 15 minutos).	**⚠ ATTENZIONE Superfici bollenti (> 60 °C)! Pericolo di ustioni!** Evitare il contatto con superfici metalliche (ad es. dissipatori di calore). Rispettare i tempi di raffreddamento dei componenti di comando (almeno 15 minuti).
⚠ ATENCIÓN ¡Manipulación inadecuada en el transporte y montaje! ¡Peligro de lesiones! Utilice dispositivos de montaje y de transporte adecuados. Utilice herramientas adecuadas y equipo de protección personal.	**⚠ CUIDADO Manejo incorreto no transporte e montagem! Perigo de ferimentos!** Utilize dispositivos de montagem e de transporte adequados. Utilize ferramentas e equipamento de proteção individual adequados.	**⚠ ATTENZIONE Manipolazione inappropriata durante il trasporto e il montaggio! Pericolo di lesioni!** Utilizzare dispositivi di montaggio e trasporto adatti. Utilizzare attrezzi adatti ed equipaggiamento di protezione personale.
⚠ ATENCIÓN ¡Manejo inadecuado de las pilas! ¡Peligro de lesiones! No trate de reactivar o cargar pilas descargadas (peligro de explosión y cauterización). No desarme ni dañe las pilas. No tire las pilas al fuego.	**⚠ CUIDADO Manejo incorreto de baterias! Perigo de ferimentos!** Não tente reativar nem carregar baterias vazias (perigo de explosão e de queimaduras com ácido). Não desmonte nem danifique as baterias. Não deite as baterias no fogo.	**⚠ ATTENZIONE Utilizzo inappropriato delle batterie! Pericolo di lesioni!** Non tentare di riattivare o ricaricare batterie scariche (pericolo di esplosione e corrosione). Non scomporre o danneggiare le batterie. Non gettare le batterie nel fuoco.

S Svenska	DK Dansk	NL Nederlands
⚠ VARNING Livsfara om följande säkerhetsanvisningar inte följs! Använd inte produkterna innan du har läst och förstått den dokumentation och de säkerhetsanvisningar som medföljer produkten, och följ alla anvisningar. Kontakta din Rexroth-återförsäljare om dokumentationen inte medföljer på ditt språk. Endast kvalificerad personal får arbeta med drivkomponenterna. Se kapitel 1 i denna dokumentation för närmare beskrivningar av säkerhetsanvisningarna.	**⚠ ADVARSEL Livsfare ved manglende overholdelse af nedenstående sikkerhedsanvisninger!** Tag ikke produktet i brug, før du har læst og forstået den dokumentation og de sikkerhedsanvisninger, som følger med produktet, og overhold de givne anvisninger. Kontakt din Rexroth-forhandler, hvis dokumentationen ikke medfølger på dit sprog. Det er kun kvalificeret personale, der må arbejde på drive components. Nærmere forklaringer til sikkerhedsanvisningerne fremgår af kapitel 1 i denne dokumentation.	**⚠ WAARSCHUWING Levensgevaar bij nietnaleving van onderstaande veiligheidsinstructies!** Stel de producten pas in bedrijf nadat u de met het product geleverde documenten en de veiligheidsinformatie volledig gelezen, begrepen en in acht genomen heeft. Mocht u niet beschikken over documenten in uw landstaal, kunt u contact opnemen met uw plaatselijke Rexroth distributiepartner. Uitsluitend gekwalificeerd personeel mag aan de aandrijvingscomponenten werken. Meer informatie over de veiligheidsinstructies vindt u in hoofdstuk 1 van deze documentatie.
⚠ VARNING Hög elektrisk spänning! Livsfara genom elchock! Använd endast drivkomponenterna med fastmonterad skyddsledare. Koppla bort spänningsförsörjningen före arbete på drivkomponenter. Var medveten om kondensatorernas urladdningstid.	**⚠ ADVARSEL Elektrisk højspænding! Livsfare på grund af elektrisk stød!** Drive components må kun benyttes med et fast installeret jordstik. Sørg for at koble spændingsforsyningen fra, inden du rører ved drive components. Overhold kondensatorernes afladningstider.	**⚠ WAARSCHUWING Hoge elektrische spanning! Levensgevaar door elektrische schok!** Bedien de aandrijvingscomponenten uitsluitend met vast geïnstalleerde aardleiding. Schakel voor toegang tot aandrijvingscomponenten de spanningsvoorziening uit. Neem de ontlaadtijden van condensatoren in acht.

Courtesy of CMA/Flodyne/Hydradyne ▪ Motion Control ▪ Hydraulic ▪ Pneumatic ▪ Electrical ▪ Mechanical ▪ (800) 426-5480 ▪ www.cmafh.com

S Svenska	DK Dansk	NL Nederlands
⚠VARNING Farliga rörelser! Livsfara! Uppehåll dig inte inom maskiners och maskindelars rörelseområde. Förhindra att obehöriga personer får tillträde. Innan du börjar arbeta eller vistas inom drivsystemets riskområde måste maskinen vara stillastående.	**⚠ADVARSEL Farlige bevægelser! Livsfare!** Du må ikke opholde dig inden for maskiners og maskindeles bevægelsesradius. Sørg for, at ingen personer kan få utilsigtet adgang. Stands drevene helt, inden du rører ved drevene eller træder ind i deres fareområde.	**⚠WAARSCHUWING Risicovolle bewegingen! Levensgevaar!** Houdt u niet op in het bewegingsbereik van machines en machineonderdelen. Voorkom dat personen onbedoeld toegang verkrijgen. Voor toegang tot de gevaarlijke zone moeten de aandrijvingen veilig tot stilstand gebracht zijn.
⚠VARNING Elektromagnetiska/magnetiska fält! Hälsofara för personer med pacemaker, implantat av metall eller hörapparat! Det är förbjudet för ovan nämnda personer (eller kräver överläggning med läkare) att beträda områden där drivkomponenter är monterade och i drift.	**⚠ADVARSEL Elektromagnetiske/magnetiske felter! Sundhedsfare for personer med pacemakere, metalliske implantater eller høreapparater!** For disse personer er der adgang forbudt eller kun adgang med tilladelse fra læge til de områder, hvor drive components monteres og drives.	**⚠WAARSCHUWING Elektromagnetische / magnetische velden! Gevaar voor de gezondheid van personen met pacemakers, metalen implantaten of hoorapparaten!** Toegang tot gebieden, waarin aandrijvingscomponenten worden gemonteerd en bediend, is verboden voor voornoemde personen of uitsluitend toegestaan na overleg met een arts.
⚠OBSERVERA Varma ytor (> 60 °C)! Risk för brännskador! Undvik att vidröra metallytor (t.ex. kylelement). Var medveten om att det tar tid för drivkomponenterna att svalna (minst 15 minuter).	**⚠FORSIGTIG Varme overflader (> 60 °C)! Risiko for forbrændinger!** Undgå at berøre metaloverflader (f.eks. køleelementer). Overhold drive components nedkølingstid (min. 15 min.).	**⚠VOORZICHTIG Hete oppervlakken (> 60 °C)! Verbrandingsgevaar!** Voorkom contact met metalen oppervlakken (bijv. Koellichamen). Afkoeltijd van de aandrijvingscomponenten in acht nemen (min. 15 minuten).
⚠OBSERVERA Felaktig hantering vid transport och montering! Skaderisk! Använd passande monterings- och transportanordningar. Använd lämpliga verktyg och personlig skyddsutrustning.	**⚠FORSIGTIG Fejlhåndtering ved transport og montering! Risiko for kvæstelser!** Benyt egnede monterings- og transportanordninger. Benyt egnet værktøj og personligt sikkerhedsudstyr.	**⚠VOORZICHTIG Onjuist gebruik bij transport en montage! Letselgevaar!** Gebruik geschikte montage- en transportinrichtingen. Gebruik geschikt gereedschap en een persoonlijke veiligheidsuitrusting.
⚠OBSERVERA Felaktig hantering av batterier! Skaderisk! Försök inte återaktivera eller ladda upp batterier (risk för explosioner och frätskador). Batterierna får inte tas isär eller skadas. Släng inte batterierna i elden.	**⚠FORSIGTIG Fejlhåndtering af batterier! Risiko for kvæstelser!** Forsøg ikke at genaktivere eller oplade tomme batterier (eksplosions- og ætsningsfare). Undlad at skille batterier ad eller at beskadige dem. Smid ikke batterier ind i åben ild.	**⚠VOORZICHTIG Onjuist gebruik van batterijen! Letselgevaar!** Probeer nooit lege batterijen te reactiveren of op te laden (explosiegevaar en gevaar voor beschadiging van weefsel door cauterisatie). Batterijen niet demonteren of beschadigen. Nooit batterijen in het vuur werpen.

Courtesy of CMA/Flodyne/Hydradyne ▪ Motion Control ▪ Hydraulic ▪ Pneumatic ▪ Electrical ▪ Mechanical ▪ (800) 426-5480 ▪ www.cmafh.com

FIN Suomi	PL Polski	CZ Český
⚠VAROITUS Näiden turvaohjeiden noudattamatta jättämisestä on seurauksena hengenvaara! Ota tuote käyttöön vasta sen jälkeen, kun olet lukenut läpi tuotteen mukana toimitetut asiakirjat ja turvallisuusohjeet, ymmärtänyt ne ja ottanut ne huomioon. Jos asiakirjoja ei ole saatavana omalla äidinkielelläsi, ota yhteys asianomaiseen Rexrothin myyntiedustajaan. Käyttölaitteiden komponenttien parissa saa työskennellä ainoastaan valtuutettu henkilöstö. Lisätietoa turvaohjeista löydät tämän dokumentaation luvusta 1.	**⚠OSTRZEŻENIE Zagrożenie życia w razie nieprzestrzegania poniższych wskazówek bezpieczeństwa!** Nie uruchamiać produktów przed uprzednim przeczytaniem i pełnym zrozumieniem wszystkich dokumentów dostarczonych wraz z produktem oraz wskazówek bezpieczeństwa. Należy przestrzegać wszystkich zawartych tam zaleceń. W przypadku braku dokumentów w Państwa języku, prosimy o skontaktowanie się z lokalnym partnerem handlowym Rexroth. Przy zespołach napędowych może pracować wyłącznie wykwalifikowany personel. Bliższe objaśnienia wskazówek bezpieczeństwa znajdują się w Rozdziale 1 niniejszej dokumentacji.	**⚠VAROVÁNÍ Nebezpečí života v případě nedodržení níže uvedených bezpečnostních pokynů!** Před uvedením výrobků do provozu si přečtěte kompletní dokumentaci a bezpečnostní pokyny dodávané s výrobkem, pochopte je a dodržujte. Nemáte-li k dispozici podklady ve svém jazyce, obraťte se na příslušného obchodního partnera Rexroth. Na komponentách pohonu smí pracovat pouze kvalifikovaný personál. Podrobnější vysvětlení k bezpečnostním pokynům naleznete v kapitole 1 této dokumentace.
⚠VAROITUS Voimakas sähköjännite! Sähköiskun aiheuttama hengenvaara! Käytä käyttölaitteen komponentteja ainoastaan maadoitusjohtimen ollessa kiinteästi asennettuna. Katkaise jännitteensyöttö ennen käyttölaitteen komponenteille suoritettavien töiden aloittamista. Huomioi kondensaattoreiden purkausajat.	**⚠OSTRZEŻENIE Wysokie napięcie elektryczne! Zagrożenie życia w wyniku porażenia prądem!** Zespoły napędu mogą być eksploatowane wyłącznie z zainstalowanym na stałe przewodem ochronnym. Przed uzyskaniem dostępu do podzespołów napędu należy odłączyć zasilanie elektryczne. Zwracać uwagę na czas rozładowania kondensatorów.	**⚠VAROVÁNÍ Vysoké elektrické napětí! Nebezpečí života při zasažení elektrickým proudem!** Komponenty pohonu smí být v provozu pouze s pevně nainstalovaným ochranným vodičem. Než začnete zasahovat do komponent pohonu, odpojte je od elektrického napájení. Dodržujte vybíjecí časy kondenzátorů.
⚠VAROITUS Vaarallisia liikkeitä! Hengenvaara! Älä oleskele koneiden tai koneenosien liikealueella. Pidä huolta siitä, ettei muita henkilöitä pääse alueelle vahingossa. Pysäytä käyttölaitteet varmasti ennen vaara-alueelle koskemista tai menemistä.	**⚠OSTRZEŻENIE Niebezpieczne ruchy! Zagrożenie życia!** Nie wolno przebywać w obszarze pracy maszyny i jej elementów. Nie dopuszczać osób niepowołanych do obszaru pracy maszyny. Przed dotknięciem urządzenia/maszyny lub zbliżeniem się do obszaru zagrożenia należy zgodnie z zasadami bezpieczeństwa wyłączyć napędy.	**⚠VAROVÁNÍ Nebezpečné pohyby! Nebezpečí života!** Nezdržujte se v dosahu pohybu strojů a jejich součástí. Zabraňte náhodnému přístupu osob. Před zásahem nebo vstupem do nebezpečného prostoru bezpečně zastavte pohony.
⚠VAROITUS Sähkömagneettisia/magneettisia kenttiä! Terveydellisten haittojen vaara henkilöille, joilla on sydämentahdistin, metallinen implantti tai kuulolaite! Yllä mainituilta henkilöiltä on pääsy kielletty alueille, joilla asennetaan tai käytetään käyttölaitteen komponentteja, tai heidän on ensin saatava tähän suostumus lääkäriltään.	**⚠OSTRZEŻENIE Pola elektromagnetyczne / magnetyczne! Zagrożenie zdrowia dla osób z rozrusznikiem serca, metalowymi implantami lub aparatami słuchowymi!** Wstęp na teren, gdzie odbywa się montaż i eksploatacja napędów jest dla ww. osób zabroniony względnie dozwolony po konsultacji z lekarzem.	**⚠VAROVÁNÍ Elektromagnetická/magnetická pole! Nebezpečí pro zdraví osob s kardiostimulátory, kovovými implantáty nebo naslouchadly!** Výše uvedené osoby mají zakázán přístup do prostorů, kde jsou montovány a používány komponenty pohonu, resp. ho mají povolen pouze po poradě s lékařem.
⚠HUOMIO Kuumia pintoja (> 60 °C)! Palovammojen vaara! Vältä metallipintojen koskettamista (esim. jäähdytyslevyt). Noudata käyttölaitteen komponenttien jäähtymisaikoja (väh. 15 minuuttia).	**⚠PRZESTROGA Gorące powierzchnie (> 60 °C)! Niebezpieczeństwo poparzenia!** Unikać kontaktu z powierzchniami metalowymi (np. radiatorami). Przestrzegać czasów schładzania podzespołów napędów (min. 15 minut).	**⚠UPOZORNĚNÍ Horké povrchy (> 60 °C)! Nebezpečí popálení!** Nedotýkejte se kovových povrchů (např. chladicích těles). Dodržujte dobu ochlazení komponent pohonu (min. 15 minut).

Courtesy of CMA/Flodyne/Hydradyne ▪ Motion Control ▪ Hydraulic ▪ Pneumatic ▪ Electrical ▪ Mechanical ▪ (800) 426-5480 ▪ www.cmafh.com

FIN Suomi	PL Polski	CZ Český
⚠ HUOMIO Epäasianmukainen käsittely kuljetuksen ja asennuksen yhteydessä! Loukkaantumisvaara! Käytä soveltuvia asennus- ja kuljetuslaitteita. Käytä omia työkaluja ja henkilökohtaisia suojavarusteita.	**⚠ PRZESTROGA Niewłaściwe obchodzenie się podczas transportu i montażu! Ryzyko urazu!** Stosować odpowiednie urządzenia montażowe i transportowe. Stosować odpowiednie narzędzia i środki ochrony osobistej.	**⚠ UPOZORNĚNÍ Nesprávné zacházení při přepravě a montáži! Nebezpečí zranění!** Používejte vhodná montážní a dopravní zařízení. Používejte vhodné nářadí a osobní ochranné vybavení.
⚠ HUOMIO Paristojen epäasianmukainen käsittely! Loukkaantumisvaara! Älä yritä saada tyhjiä paristoja toimimaan tai ladata niitä uudelleen (räjähdys- ja syöpymisvaara). Älä hajota paristoja osiin tai vaurioita niitä. Älä heitä paristoja tuleen.	**⚠ PRZESTROGA Niewłaściwe obchodzenie się z bateriami! Ryzyko urazu!** Nie próbować reaktywować i nie ładować zużytych baterii (niebezpieczeństwo wybuchu oraz poparzenia żrącą substancją). Nie demontować i nie niszczyć baterii. Nie wrzucać baterii do ognia.	**⚠ UPOZORNĚNÍ Nesprávné zacházení s bateriemi! Nebezpečí zranění!** Nepokoušejte se znovu aktivovat nebo dobíjet prázdné baterie (nebezpečí výbuchu a poleptání). Nerozebírejte ani nepoškozujte baterie. Neházejte baterie do ohně.

SLO Slovensko	SK Slovenčina	RO Română
⚠ OPOZORILO Življenjska nevarnost pri neupoštevanju naslednjih napotkov za varnost! Izdelke začnite uporabljati šele, ko v celoti preberete, razumete in upoštevate izdelkom priloženo dokumentacijo in varnostne napotke. Če priložena dokumentacija ni na voljo v vašem maternem jeziku, se obrnite na pristojnega distributerja Rexroth. Samo kvalificirano osebje sme delati na pogonskih komponentah. Podrobnejša pojasnila o varnostnih navodilih najdete v poglavju 1 v tej dokumentaciji.	**⚠ VAROVANIE Nebezpečenstvo ohrozenia života pri nedodržiavaní nasledujúcich bezpečnostných pokynov!** Výrobky uvádzajte do prevádzky až potom, čo ste úplne prečítali, pochopili a zobrali do úvahy podklady a bezpečnostné pokyny dodané s výrobkom. Ak by ste nemali k dispozícii žiadne podklady v jazyku svojej krajiny, obráťte sa prosím na svojho príslušného predajcu Rexroth. Na komponentoch pohonu smie pracovať iba kvalifikovaný personál. Bližšie vysvetlenia k bezpečnostným pokynom zistite z kapitoly 1 tejto dokumentácie.	**⚠ AVERTIZARE Pericol de moarte în cazul nerespectării următoarelor instrucțiuni de siguranță!** Punerea în funcțiune a produselor trebuie efectuată după citirea, înțelegerea și respectarea documentelor și instrucțiunilor de siguranță, care sunt livrate împreună cu produsele. În cazul în care documentele nu sunt în limba dumneavoastră maternă, vă rugăm să contactați partenerul de vânzări Rexroth. Numai un personal calificat poate lucra cu componentele de acționare. Explicații detaliate privind instrucțiunile de siguranță găsiți în capitolul 1 al acestei documentații.
⚠ OPOZORILO Visoka električna napetost! Življenjska nevarnost zaradi električnega udara! Pogonske komponente uporabljajte samo s fiksno nameščenim zaščitnim vodnikom. Pred dostopom do pogonske komponente odklopite napajanje. Upoštevajte čase praznjenja kondenzatorjev.	**⚠ VAROVANIE Vysoké elektrické napätie! Nebezpečenstvo ohrozenia života v dôsledku zásahu elektrickým prúdom!** Komponenty pohonu prevádzkujte iba s pevne nainštalovaným ochranným vodičom. Pred prístupom na komponenty pohonu odpojte zdroj napätia. Rešpektujte časy vybitia kondenzátorov.	**⚠ AVERTIZARE Tensiune electrică înaltă! Pericol de moarte prin electrocutare!** Exploatați componentele de acționare numai cu împământarea instalată permanent. Înainte de intervenția asupra componentelor de acționare, deconectați alimentarea cu tensiune electrică. Țineți cont de timpii de descărcare ai condensatorilor.
⚠ OPOZORILO Nevarni premiki! Življenjska nevarnost! Ne zadržujte se v območju delovanja strojev. Preprečite nenadzorovan dostop oseb. Pred prijemom ali dostopom v nevarno območje varno zaustavite vse gnane dele.	**⚠ VAROVANIE Pohyby prinášajúce nebezpečenstvo! Nebezpečenstvo ohrozenia života!** Nezdržiavajte sa v oblasti pohybu strojov a častí strojov. Zabráňte nepovolanému prístupu osôb. Pred zásahom alebo prístupom do nebezpečnej oblasti uveďte pohony bezpečne do zastavenia.	**⚠ AVERTIZARE Mișcări periculoase! Pericol de moarte!** Nu staționați în zona de mișcare a mașinilor și a componentelor în mișcare a mașinilor. Împiedicați accesul neintenționat al persoanelor în zona de lucru a mașinilor. Înainte de intervenția sau accesul în zona periculoasă, opriți în siguranță componentele de acționare.
⚠ OPOZORILO Elektromagnetna / magnetna polja! Nevarnost za zdravje za osebe s spodbujevalniki srca, kovinskimi vsadki ali slušnimi aparati! Dostop do območij, v katerih so nameščene delujoče pogonske komponente, je za zgoraj navedene osebe prepovedan oz. dovoljen samo po posvetu z zdravnikom.	**⚠ VAROVANIE Elektromagnetické/magnetické polia! Nebezpečenstvo pre zdravie osôb s kardiostimulátormi, kovovými implantátmi alebo načúvacími prístrojmi!** Prístup k oblastiam, v ktorých sú namontované a prevádzkujú sa komponenty pohonu, je pre hore uvedené osoby zakázaný resp. je dovolený iba po konzultácii s lekárom.	**⚠ AVERTIZARE Câmpuri electromagnetice / magnetice! Pericol pentru sănătatea persoanelor cu stimulatoare cardiace, implanturi metalice sau aparate auditive!** Intrarea în zone, în care se montează sau se exploatează componente de acționare, este interzisă pentru persoanele sus numite respectiv este permisă numai cu acordul medicului.

Courtesy of CMA/Flodyne/Hydradyne ▪ Motion Control ▪ Hydraulic ▪ Pneumatic ▪ Electrical ▪ Mechanical ▪ (800) 426-5480 ▪ www.cmafh.com

SLO Slovensko	SK Slovenčina	RO Română
⚠ POZOR Vroče površine (> 60 °C)! Nevarnost opeklin! Izogibajte se stiku s kovinskimi površinami (npr. hladilnimi telesi). Upoštevajte čas hlajenja pogonskih komponent (najm. 15 minut).	**⚠ UPOZORNENIE Horúce povrchy (> 60 °C)! Nebezpečenstvo popálenia!** Zabráňte kontaktu s kovovými povrchmi (napr. chladiacimi telesami). Dodržiavajte čas vychladenia komponentov pohonu (min. 15 minút).	**⚠ ATENŢIE Suprafeţe fierbinţi (> 60 °C)! Pericol de arsuri!** Nu atingeţi suprafeţele metalice (de ex. radiatoare de răcire). Respectaţi timpii de răcire ai componentelor de acţionare (min. 15 minute).
⚠ POZOR Nestrokovno ravnanje med transportom in namestitvijo! Nevarnost poškodb! Uporabljajte ustrezne pripomočke za nameščanje in transport. Uporabite ustrezno orodje in osebno zaščitno opremo.	**⚠ UPOZORNENIE Neodborná manipulácia pri transporte a montáži! Nebezpečenstvo poranenia!** Používajte vhodné montážne a transportné zariadenia. Používajte vhodné náradie a osobné ochranné prostriedky.	**⚠ ATENŢIE Manipulare necorespunzătoare la transport şi montaj! Pericol de vătămare!** Utilizaţi dispozitive adecvate de montaj şi transport. Folosiţi instrumente corespunzătoare şi echipament personal de protecţie.
⚠ POZOR Nepravilno ravnanje z baterijami! Nevarnost poškodb! Ne poskušajte ponovno aktivirati ali napolniti praznih baterij (Nevarnost zaradi eksplozij ali jedkanja). Ne razstavljajte ali poškodujte nobenih baterij. Baterij ne mečite v ogenj.	**⚠ UPOZORNENIE Neodborná manipulácia s batériami! Nebezpečenstvo poranenia!** Nepokúšajte sa reaktivovať alebo nabíjať prázdne batérie (nebezpečenstvo výbuchu a poleptania). Batérie nerozoberajte ani nepoškodzujte. Nehádžte batérie do ohňa.	**⚠ ATENŢIE Manipulare necorespunzătoare a bateriilor! Pericol de vătămare!** Nu încercaţi să reactivaţi sau să încărcaţi bateriile goale (pericol de explozie şi pericol de arsuri). Nu dezasamblaţi şi nu deterioraţi bateriile. Nu aruncaţi bateriile în foc.

H Magyar	BG Български	LV Latviski
⚠ FIGYELMEZTETÉS! Az alábbi biztonsági útmutatások figyelmen kívül hagyása életveszélyes helyzethez vezethet! Üzembe helyezés előtt olvassa el, értelmezze, és vegye figyelembe a csomagban található dokumentumban foglaltakat és a biztonsági útmutatásokat. Amennyiben a csomagban nem talál az Ön nyelvén írt dokumentumokat, vegye fel a kapcsolatot az illetékes Rexroth-képviselővel. A hajtás alkatrészein kizárólag képzett személy dolgozhat. A biztonsági útmutatókkal kapcsolatban további magyarázatot ennek a dokumentumnak az első fejezetében találhat.	**⚠ ПРЕДУПРЕЖДЕНИЕ Опасност за живота при неспазване на посочените по-долу инструкции за безопасност!** Използвайте продуктите след като сте се запознали подробно с приложената към продукта документация и указания за безопасност, разбрали сте ги и сте се съобразили с тях. Ако текстът не е написан на Вашия език, моля обърнете се към Вашия компетентен търговски представител на Rexroth. Със задвижващите компоненти трябва да работи само квалифициран персонал. Подробни пояснения към инструкциите за безопасност можете да видите в Глава 1 на тази документация.	**⚠ BRĪDINĀJUMS Turpinājumā doto drošības norādījumu neievērošana var apdraudēt dzīvību!** Sāciet lietot izstrādājumu tikai pēc tam, kad esat pilnībā izlasījuši, sapratuši un ņēmuši vērā kopā ar izstrādājumu piegādātos dokumentus. Ja dokumenti nav pieejami Jūsu valsts valodā, vērsieties pie pilnvarotā Rexroth izplatītāja. Darbus pie piedziņas komponentiem drīkst veikt tikai kvalificēts personāls. Detalizētus paskaidrojumus attiecībā uz drošības norādījumiem skatiet šī dokumenta 1. nodaļā.
⚠ FIGYELMEZTETÉS! Magas elektromos feszültség! Életveszély áramütés miatt! A hajtás alkatrészeit csak véglegesen telepített védővezetővel üzemeltesse! Mielőtt hozzányúl a hajtás alkatrészeihez, kapcsolja ki az áramellátást. Ügyeljen a kondenzátorok kisülési idejére!	**⚠ ПРЕДУПРЕЖДЕНИЕ Високо електрическо напрежение! Опасност за живота от удар от електрически ток!** Работете със задвижващите компоненти само при здраво закрепен заземяващ проводник. Преди работа по задвижващите компоненти, изключете захранващото напрежение. Обърнете внимание на времето за разреждане на кондензаторите.	**⚠ BRĪDINĀJUMS Augsts elektriskais spriegums! Dzīvības apdraudējums elektriskā trieciena dēļ!** Piedziņas komponentus darbiniet tikai ar fiksēti uzstādītu zemējumvadu. Pirms darba pie piedziņas komponentiem atslēdziet elektroapgādi. Ņemiet vērā kondensatoru izlādes laikus.
⚠ FIGYELMEZTETÉS! Veszélyes mozgás! Életveszély! Ne tartózkodjon a gépek és a gépalkatrészek mozgási területén belül! Illetéktelen személyeket ne engedjen a gép közelébe! Mielőtt beavatkozik, vagy a veszélyes zónába belép a hajtásokat biztonságosan állítsa le.	**⚠ ПРЕДУПРЕЖДЕНИЕ Опасни движения! Опасност за живота!** Не стойте в обсега на движение на машините и частите на машините. Не допускайте непреднамерен достъп на хора. Преди работа или влизане в опасната зона, спрете надеждно приводния механизъм.	**⚠ BRĪDINĀJUMS Bīstamas kustības! Dzīvības apdraudējums!** Neuzturieties mašīnu un mašīnas detaļu kustību zonā. Novērsiet nepiederošu personu piekļūšanu. Pirms darba bīstamajās zonās pilnībā apstādiniet piedziņu.

Courtesy of CMA/Flodyne/Hydradyne ▪ Motion Control ▪ Hydraulic ▪ Pneumatic ▪ Electrical ▪ Mechanical ▪ (800) 426-5480 ▪ www.cmafh.com

H Magyar	BG Български	LV Latviski
⚠ FIGYELMEZTETÉS! Elektromágneses / mágneses mező! Káros hatással lehet a szívritmus-szabályozó készülékkel, fémbeültetéssel vagy hallókészülékkel rendelkezők egészségére! Azokra a területekre, ahol hajtások alkatrészeit szerelik és üzemeltetik, a fent említett személyeknek tilos a belépés, illetve csak orvosi konzultációt követően szabad az adott területekre lépniük.	**⚠ ПРЕДУПРЕЖДЕНИЕ Електромагнитни / магнитни полета! Опасност за здравето на хора със сърдечни стимулатори, метални импланти или слухови апарати!** Достъпът за гореспоменатите лица до зони, в които ще се монтират и ще работят задвижващи компоненти се забранява, или разрешава само след консултация с лекар.	**⚠ BRĪDINĀJUMS Elektromagnētiskais / magnētiskais lauks! Veselības apdraudējums personām ar sirds stimulatoriem, metāliskiem implantiem vai dzirdes aparātiem!** Tuvošanās zonām, kurās tiek montēti un darbināti piedziņas komponenti, iepriekš minētajām personām ir aizliegta, respektīvi, atļauta tikai pēc konsultēšanās ar ārstu.
⚠ VIGYÁZAT! Forró felületek (> 60 °C)! Égésveszély! Ne érjen hozzá fémfelületekhez (pl. hűtőtestekhez)! Vegye figyelembe a hajtás alkatrészeinek kihűlési idejét (min. 15 perc)!	**⚠ ВНИМАНИЕ Горещи повърхности (> 60 °C)! Опасност от изгаряне!** Не докосвайте метални повърхности (например радиатори). Съблюдавайте времето на охлаждане на задвижващите компоненти (мин. 15 минути).	**⚠ UZMANĪBU Karstas virsmas (> 60 °C)! Apdedzināšanās risks!** Neskarieties pie metāliskām virsmām (piemēram, dzesētāja). Ļaujiet piedziņas komponentiem atdzist (min. 15 minūtes).
⚠ VIGYÁZAT! Szakszerűtlen kezelés szállításkor és szereléskor! Sérülésveszély! A megfelelő beszerelési és szállítási eljárásokat alkalmazza! Használjon megfelelő szerszámokat és személyes védőfelszerelést!	**⚠ ВНИМАНИЕ Неправилно боравене по време на транспорт и монтаж!Опасност от нараняване!** Използвайте подходящо монтажно и транспортно оборудване. Използвайте подходящи инструменти и лични предпазни средства.	**⚠ UZMANĪBU Nepareizi veikta transportēšana un montāža! Traumu gūšanas risks!** Izmantojiet piemērotas montāžas un transportēšanas ierīces. Izmantojiet piemērotus instrumentus un individuālos aizsardzības līdzekļus.
⚠ VIGYÁZAT! Akkumulátorok szakszerűtlen kezelése! Sérülésveszély! Üres akkumulátorokat ne aktiváljon újra, illetve ne töltsön fel (robbanás- és marásveszély)! Az akkumulátorokat ne szedje szét, és ne rongálja meg! Az akkumulátort ne dobja tűzbe!	**⚠ ВНИМАНИЕ Неправилно боравене с батерии! Опасност от нараняване!** Не се опитвайте да активирате отново или да зареждате разредени батерии (Опасност от експлозия и напръскване с агресивен агент). Не разглобявайте и не повреждайте батерии. Не хвърляйте батерии в огън.	**⚠ UZMANĪBU Nepareiza bateriju lietošana! Traumu gūšanas risks!** Nemēģiniet no jauna aktivizēt vai uzlādēt tukšas baterijas (eksploziju un ķīmisko apdegumu draudi). Neizjauciet un nesabojājiet baterijas. Nemetiet baterijas ugunī.

LT Lietuviškai	EST Eesti	GR Ελληνικά
⚠ ĮSPĖJIMAS Pavojus gyvybei nesilaikant toliau pateikiamų saugumo nurodymų! Naudokite gaminį tik kruopščiai perskaitę prie jo pridėtus aprašus, saugumo nurodymus. Susipažinkite su jais ir vadovaukitės naudodami gaminį. Jei Jūs negavote aprašo gimtąja kalba, kreipkitės į įgaliotus Rexroth atstovus. Prie pavaros komponentų leidžiama dirbti tik kvalifikuotam personalui. Išsamesnius saugumo nurodymų paaiškinimus rasite šios dokumentacijos 1 skyriuje.	**⚠ HOIATUS Alljärgnevate ohutusjuhiste eiramine on eluohtlik!** Võtke tooted käiku alles siis, kui olete toodetega kaasasolevad materjalid ning ohutusjuhised täielikult läbi lugenud, neist aru saanud ja neid järginud. Kui Teil puuduvad emakeelsed materjalid, siis pöörduge Rexrothi kohaliku müügiesinduse poole. Ajamikomponentidega tohib töötada üksnes kvalifitseeritud personal. Täpsemaid selgitusi ohutusjuhiste kohta leiate käesoleva dokumentatsiooni peatükist 1.	**⚠ ΠΡΟΕΙΔΟΠΟΙΗΣΗ Κίνδυνος θανάτου σε περίπτωση μη συμμόρφωσης με τις παρακάτω οδηγίες ασφαλείας!** Θέστε το προϊόν σε λειτουργία αφού διαβάσετε, κατανοήσετε και λάβετε υπόψη το σύνολο των οδηγιών ασφαλείας που το συνοδεύουν. Εάν δεν υπάρχει τεκμηρίωση στη γλώσσα σας, απευθυνθείτε σε εξουσιοδοτημένο αντιπρόσωπο της Rexroth. Μόνο εξειδικευμένο προσωπικό επιτρέπεται να χειρίζεται στοιχεία μετάδοσης κίνησης. Περαιτέρω επεξηγήσεις των οδηγιών ασφαλείας διατίθενται στο κεφάλαιο 1 της παρούσας τεκμηρίωσης.
⚠ ĮSPĖJIMAS Aukšta elektros įtampa! Pavojus gyvybei dėl elektros smūgio! Pavaros komponentus eksploatuokite tik su fiksuotai instaliuotu apsauginiu laidu. Prieš prieidami prie pavaros komponentų išjunkite maitinimo įtampą. Atsižvelkite į kondensatorių išsikrovimo trukmę.	**⚠ HOIATUS Kõrge elektripinge! Eluohtlik elektrilöögi tõttu!** Käitage ajamikomponente üksnes püsivalt installeeritud maandusega. Lülitage enne ajamikomponentidega tööde alustamist toitepinge välja. Järgige kondensaatorite mahalaadumisaegu.	**⚠ ΠΡΟΕΙΔΟΠΟΙΗΣΗ Υψηλή ηλεκτρική τάση! Κίνδυνος θανάτου από ηλεκτροπληξία!** Θέτετε σε λειτουργία τα στοιχεία μετάδοσης κίνησης μόνο εφόσον έχει τοποθετηθεί καλά προστατευτικός αγωγός γείωσης. Πριν από οποιαδήποτε παρέμβαση, αποσυνδέστε την τροφοδοσία των στοιχείων μετάδοσης κίνησης. Λάβετε υπόψη τους χρόνους αποφόρτισης των πυκνωτών.

Courtesy of CMA/Flodyne/Hydradyne ▪ Motion Control ▪ Hydraulic ▪ Pneumatic ▪ Electrical ▪ Mechanical ▪ (800) 426-5480 ▪ www.cmafh.com

LT Lietuviškai	EST Eesti	GR Ελληνικά
⚠ ĮSPĖJIMAS Pavojingi judesiai! Pavojus gyvybei! Nebūkite mašinų ar jų dalių judėjimo zonoje. Neleiskite netyčia patekti asmenims. Prieš patekdami į pavojaus zoną saugiai išjunkite pavaras.	**⚠ HOIATUS Ohtlikud liikumised! Eluohtlik!** Ärge viibige masina ja masinaosade liikumispiirkonnas. Tõkestage inimeste ettekavatsematu sisenemine masina ja masinaosade liikumispiirkonda. Tagage ajamite turvaline seiskamine enne ohupiirkonda juurdepääsu või sisenemist.	**⚠ ΠΡΟΕΙΔΟΠΟΙΗΣΗ Επικίνδυνες τάσεις! Κίνδυνος θανάτου!** Μην στέκεστε στην περιοχή κίνησης μηχανημάτων και εξαρτημάτων. Αποτρέπετε την τυχαία είσοδο ατόμων. Πριν από την παρέμβαση ή πρόσβαση στην περιοχή κινδύνου, μεριμνήστε για την ασφαλή ακινητοποίηση των συστημάτων μετάδοσης κίνησης.
⚠ ĮSPĖJIMAS Elektromagnetiniai / magnetiniai laukai! Pavojus asmenų su širdies stimuliatoriais, metaliniais implantais arba klausos aparatais sveikatai! Prieiga prie zonų, kuriose montuojami ir eksploatuojami pavaros komponentai, aukščiau nurodytiems asmenims yra draudžiama arba leistina tik pasitarus su gydytoju.	**⚠ HOIATUS Elektromagnetilised / magnetilised väljad! Terviseohtlik südamestimulaatorite, metallimplantaatide ja kuulmisseadmetega inimestele!** Sisenemine piirkondadesse, kus toimub ajamikomponentide monteerimine ja käitamine, on ülalnimetatud isikutele keelatud või lubatud üksnes pärast arstiga konsulteerimist.	**⚠ ΠΡΟΕΙΔΟΠΟΙΗΣΗ Ηλεκτρομαγνητικά/ μαγνητικά πεδία! Κίνδυνος για την υγεία ατόμων με καρδιακούς βηματοδότες, μεταλλικά εμφυτεύματα ή συσκευές ακοής!** Η είσοδος σε περιοχές όπου πραγματοποιείται συναρμολόγηση και λειτουργία στοιχείων μετάδοσης κίνησης απαγορεύεται στα προαναφερθέντα άτομα, εκτός αν τους έχει δοθεί σχετική άδεια κατόπιν συνεννόησης με γιατρό.
⚠ PERSPĖJIMAS Karšti paviršiai (> 60 °C)! Nudegimo pavojus! Venkite liesti metalinius paviršius (pvz., radiatorių). Išlaikykite pavaros komponentų atvėsimo trukmę (bent 15 minučių).	**⚠ ETTEVAATUST Kuumad välispinnad (> 60 °C)! Põletusoht!** Vältige metalsete välispindade (nt radiaatorid) puudutamist. Pidage kinni ajamikomponentide mahajahtumisajast (vähemalt 15 minutit).	**⚠ ΠΡΟΣΟΧΗ Καυτές επιφάνειες (> 60 °C)! Κίνδυνος εγκαύματος!** Αποφεύγετε την επαφή με μεταλλικές επιφάνειες (π.χ. μονάδες ψύξης). Λάβετε υπόψη το χρόνο ψύξης των στοιχείων μετάδοσης κίνησης (τουλάχιστον 15 λεπτά).
⚠ PERSPĖJIMAS Netinkamas darbas transportuojant ir montuojant! Susižalojimo pavojus! Naudokite tinkamus montavimo ir transportavimo įrenginius. Naudokite tinkamus įrankius ir asmens saugos priemones.	**⚠ ETTEVAATUST Asjatundmatu käsitsemine transportimisel ja montaažil! Vigastusoht!** Kasutage sobivaid montaaži- ja transpordiseadiseid. Kasutage sobivaid tööriistu ja isiklikku kaitsevarustust.	**⚠ ΠΡΟΣΟΧΗ Ακατάλληλος χειρισμός κατά τη μεταφορά και συναρμολόγηση! Κίνδυνος τραυματισμού!** Χρησιμοποιείτε κατάλληλους μηχανισμούς συναρμολόγησης και μεταφοράς. Χρησιμοποιείτε κατάλληλα εργαλεία και ατομικό εξοπλισμό προστασίας.
⚠ PERSPĖJIMAS Netinkamas darbas su baterijomis! Susižalojimo pavojus! Nebandykite tuščių baterijų reaktyvuoti arba įkrauti (sprogimo ir išėsdinimo pavojus). Neardykite ir nepažeiskite baterijų. Nemeskite baterijų į ugnį.	**⚠ ETTEVAATUST Patareide asjatundmatu käsitsemine! Vigastusoht!** Ärge üritage kunagi tühje patareisid reaktiveerida või täis laadida (plahvatus- ja söövitusoht). Ärge demonteerige ega kahjustage patareisid. Ärge visake patareisid tulle.	**⚠ ΠΡΟΣΟΧΗ Ακατάλληλος χειρισμός μπαταριών! Κίνδυνος τραυματισμού!** Μην επιδιώκετε να ενεργοποιήσετε ξανά ή να φορτίσετε κενές μπαταρίες (κίνδυνος έκρηξης και διάβρωσης). Μην διαλύετε ή καταστρέφετε τις μπαταρίες. Μην απορρίπτετε τις μπαταρίες στη φωτιά.

CN 中文
⚠ 警告 如果不按照下述指定的安全说明使用，将会导致人身伤害！ 在没有阅读，理解随本产品附带的文件并熟知正当使用前，不要安装或使用本产品。 如果没有您所在国家官方语言文件说明，请与 Rexroth 销售伙伴联系。 只允许有资格人员对驱动器部件进行操作。 安全说明的详细解释在本文档的第一章。
⚠ 警告 高电压！电击导致生命危险！ 只有在安装了永久良好的设备接地导线后才可以对驱动器的部件进行操作。 在接触驱动器部件前先将驱动器部件断电。 确保电容放电时间。
⚠ 警告 危险运动！生命危险！ 保证设备的运动区域内和移动部件周围无障碍物。 防止人员意外进入设备运动区域内。 在接近或进入危险区域之前，确保传动设备安全停止。

Courtesy of CMA/Flodyne/Hydradyne ▪ Motion Control ▪ Hydraulic ▪ Pneumatic ▪ Electrical ▪ Mechanical ▪ (800) 426-5480 ▪ www.cmafh.com

CN 中文
⚠警告 **电磁场/磁场！对佩戴心脏起搏器、金属植入物和助听器的人员会造成严重的人身伤害！** 上述人员禁止进入安装及运行的驱动器区域，或者必须事先咨询医生。
⚠小心 **热表面（大于 60 度）！灼伤风险！** 不要触摸金属表面（例如散热器）。驱动器部件断电后需要时间进行冷却（至少 15 分钟）。
⚠小心 **安装和运输不当导致受伤危险！当心受伤！** 使用适当的运输和安装设备。 使用适合的工具及用适当的防护设备。
⚠小心 **电池操作不当！受伤风险！** 请勿对低电量电池重新激活或重新充电（爆炸和腐蚀的危险）。 请勿拆解或损坏电池。请勿将电池投入明火中。

Table of Contents

Page

1 Important Notes ... 13
1.1 Safety Instructions ... 13
1.1.1 General Information ... 13
1.1.2 Protection Against Contact With Electrical Parts and Housings ... 14
1.1.3 Protection Against Dangerous Movements ... 15
1.1.4 Protection Against Magnetic and Electromagnetic Fields During Operation and Mounting ... 17
1.1.5 Protection Against Contact With Hot Parts ... 17
1.1.6 Protection During Handling and Mounting ... 17
1.1.7 Battery Safety ... 18
1.2 Appropriate Use ... 18

2 Identification ... 21
2.1 Type Code ... 21
2.2 Type Plates ... 22
2.3 Scope of Supply ... 22

3 Ratings and Dimensions ... 23

4 Documentations ... 25
4.1 Drive Systems, System Components ... 25
4.2 Motors ... 25
4.3 Cables ... 26
4.4 Firmware ... 26

5 Instructions for Use ... 27
5.1 General ... 27
5.2 Touch Guard ... 27
5.3 Connection Points ... 29
5.3.1 Wiring Diagrams ... 29
Wiring Diagram with HMV01 as Supply Unit und KSM as Power Section ... 29
Wiring Diagram with HCS02 as Supply Unit und KSM as Power Section ... 30
Wiring Diagram with HCS03 as Supply Unit und KSM as Power Section ... 31
Wiring Diagram with HMV02 as Supply Unit und KSM as Power Section ... 33
5.3.2 Connection Diagram ... 34
5.3.3 Position of Connection Points ... 35
5.3.4 Connection Point of Equipment Grounding Conductor ... 36
5.3.5 Ground Connection ... 37
5.3.6 Terminal Block, 24 - 0V (24V Supply) ... 37
5.3.7 Terminal Block L+, L- (DC Bus Connection) ... 38
5.3.8 X49, L3 - Safe Torque Off ... 41
Data ... 41
Pin Assignment, Function ... 41
5.4 Installation ... 42

Courtesy of CMA/Flodyne/Hydradyne ▪ Motion Control ▪ Hydraulic ▪ Pneumatic ▪ Electrical ▪ Mechanical ▪ (800) 426-5480 ▪ www.cmafh.com

Courtesy of CMA/Flodyne/Hydradyne ▪ Motion Control ▪ Hydraulic ▪ Pneumatic ▪ Electrical ▪ Mechanical ▪ (800) 426-5480 ▪ www.cmafh.com

Table of Contents

Page

5.4.1 General Information on How to Install the Drive Controller ... 42
5.5 Diagnostic Display KCU02 ... 43
5.6 Replacing Fuses F4 and F5 ... 44

6 EMC Measures for Design and Installation ... 47
6.1 Rules for Design of Installations With Drive Controllers in Compliance With EMC ... 47
6.2 EMC-Optimal Installation in Facility and Control Cabinet ... 48
6.2.1 General Information ... 48
6.2.2 Division Into Areas (Zones) ... 48
6.2.3 Control Cabinet Mounting According to Interference Areas - Exemplary Arrangements ... 49
6.2.4 Design and Installation in Area A - Interference-Free Area of Control Cabinet ... 53
6.2.5 Design and Installation in Area B - Interference-Susceptible Area of Control Cabinet ... 55
6.2.6 Design and Installation in Area C - Strongly Interference-Susceptible Area of Control Cabinet ... 55
6.3 Ground Connections ... 55
6.4 Installing Signal Lines and Signal Cables ... 56
6.5 General Measures of Radio Interference Suppression for Relays, Contactors, Switches, Chokes and Inductive Loads ... 57

7 Accessories ... 59
7.1 Overview ... 59
7.2 Information on Accessory HAS02 ... 60

8 Service and Support ... 61

9 Environmental Protection and Disposal ... 63
9.1 Environmental Protection ... 63
9.2 Disposal ... 63

10 Appendix ... 65
10.1 Digital Inputs and Outputs ... 65
10.1.1 Digital Inputs (Safety Technology "L Options") ... 65
10.1.2 Digital Outputs (Safety Technology "L Options") ... 65

Index ... 67

Courtesy of CMA/Flodyne/Hydradyne ▪ Motion Control ▪ Hydraulic ▪ Pneumatic ▪ Electrical ▪ Mechanical ▪ (800) 426-5480 ▪ www.cmafh.com

1 Important Notes

1.1 Safety Instructions

1.1.1 General Information

- Do not attempt to install and operate the components of the electric drive and control system without first reading all documentation provided with the product. Read and understand these safety instructions and all user documentation prior to working with these components. If you do not have the user documentation for the components, contact your responsible Rexroth sales partner. Ask for these documents to be sent immediately to the person or persons responsible for the safe operation of the components.
- If the supplied documents contain some information you do not understand, it is absolutely necessary that you ask Rexroth for explanation before you start working at or with the components.
- If the component is resold, rented and/or passed on to others in any other form, these safety instructions must be delivered with the component in the official language of the user's country.
- Only qualified persons may work with components of the electric drive and control system or within its proximity.

  In terms of this Instruction Manual, qualified persons are those persons who are familiar with the installation, mounting, commissioning and operation of the components of the electric drive and control system, as well as with the hazards this implies, and who possess the qualifications their work requires. To comply with these qualifications, it is necessary, among other things,

  – to be trained, instructed or authorized to switch electric circuits and components safely on and off, to ground them and to mark them,
  – to be trained or instructed to maintain and use adequate safety equipment,
  – to attend a course of instruction in first aid.
- The technical data, connection and installation conditions of the components are specified in the respective application documentations and must be followed at all times.
- If the components take the form of hardware, then they must remain in their original state, in other words, no structural changes are permitted. It is not permitted to decompile software components or alter source codes.
- Do not mount damaged or faulty components or use them in operation.
- Only use accessories and spare parts approved by Rexroth.
- Follow the safety regulations and requirements of the country in which the electric components of the electric drive and control system are operated.
- Proper and correct transport, storage, mounting and installation, as well as care in operation and maintenance, are prerequisites for optimal and safe operation of the component.

Improper use of these components, failure to follow the safety instructions in this document or tampering with the product, including disabling of safety devices, could result in property damage, injury, electric shock or even death.

Courtesy of CMA/Flodyne/Hydradyne ▪ Motion Control ▪ Hydraulic ▪ Pneumatic ▪ Electrical ▪ Mechanical ▪ (800) 426-5480 ▪ www.cmafh.com

1.1.2 Protection Against Contact With Electrical Parts and Housings

☞ This section concerns components of the electric drive and control system with voltages of **more than 50 volts**.

Contact with parts conducting voltages above 50 volts can cause personal danger and electric shock. When operating components of the electric drive and control system, it is unavoidable that some parts of these components conduct dangerous voltage.

High electrical voltage! Danger to life, risk of injury by electric shock or serious injury!

- Only qualified persons are allowed to operate, maintain and/or repair the components of the electric drive and control system.
- Follow the general installation and safety regulations when working on power installations.
- Before switching on, the equipment grounding conductor must have been permanently connected to all electric components in accordance with the connection diagram.
- Even for brief measurements or tests, operation is only allowed if the equipment grounding conductor has been permanently connected to the points of the components provided for this purpose.
- Before accessing electrical parts with voltage potentials higher than 50 V, you must disconnect electric components from the mains or from the power supply unit. Secure the electric component from reconnection.
- With electric components, observe the following aspects:

  Always wait **30 minutes** after switching off power to allow live capacitors to discharge before accessing an electric component. Measure the electrical voltage of live parts before beginning to work to make sure that the equipment is safe to touch.
- Install the covers and guards provided for this purpose before switching on.
- Never touch electrical connection points of the components while power is turned on.
- Do not remove or plug in connectors when the component has been powered.
- Under specific conditions, electric drive systems can be operated at mains protected by residual-current-operated circuit-breakers sensitive to universal current (RCDs/RCMs).
- Secure built-in devices from penetrating foreign objects and water, as well as from direct contact, by providing an external housing, for example a control cabinet.

High housing voltage and high leakage current! Danger to life, risk of injury by electric shock!

- Before switching on and before commissioning, ground or connect the components of the electric drive and control system to the equipment grounding conductor at the grounding points.

- Connect the equipment grounding conductor of the components of the electric drive and control system permanently to the main power supply at all times. The leakage current is greater than 3.5 mA.
- Establish an equipment grounding connection with a minimum cross section according to the table below. With an outer conductor cross section smaller than 10 mm² (8 AWG), the alternative connection of two equipment grounding conductors is allowed, each having the same cross section as the outer conductors.

Cross section outer conductor	Minimum cross section equipment grounding conductor Leakage current ≥ 3.5 mA	
	1 equipment grounding conductor	2 equipment grounding conductors
1,5 mm² (AWG 16)	10 mm² (AWG 8)	2 × 1,5 mm² (AWG 16)
2,5 mm² (AWG 14)		2 × 2,5 mm² (AWG 14)
4 mm² (AWG 12)		2 × 4 mm² (AWG 12)
6 mm² (AWG 10)		2 × 6 mm² (AWG 10)
10 mm² (AWG 8)		-
16 mm² (AWG 6)	16 mm² (AWG 6)	-
25 mm² (AWG 4)		-
35 mm² (AWG 2)		-
50 mm² (AWG 1/0)	25 mm² (AWG 4)	-
70 mm² (AWG 2/0)	35 mm² (AWG 2)	-
...	...	...

Fig.1-1: Minimum Cross Section of the Equipment Grounding Connection

1.1.3 Protection Against Dangerous Movements

Dangerous movements can be caused by faulty control of connected motors. Some common examples are:

- Improper or wrong wiring or cable connection
- Operator errors
- Wrong input of parameters before commissioning
- Malfunction of sensors and encoders
- Defective components
- Software or firmware errors

These errors can occur immediately after equipment is switched on or even after an unspecified time of trouble-free operation.

The monitoring functions in the components of the electric drive and control system will normally be sufficient to avoid malfunction in the connected drives. Regarding personal safety, especially the danger of injury and/or property damage, this alone cannot be relied upon to ensure complete safety. Until the integrated monitoring functions become effective, it must be assumed in any case that faulty drive movements will occur. The extent of faulty drive movements depends upon the type of control and the state of operation.

Courtesy of CMA/Flodyne/Hydradyne ▪ Motion Control ▪ Hydraulic ▪ Pneumatic ▪ Electrical ▪ Mechanical ▪ (800) 426-5480 ▪ www.cmafh.com

Courtesy of CMA/Flodyne/Hydradyne ▪ Motion Control ▪ Hydraulic ▪ Pneumatic ▪ Electrical ▪ Mechanical ▪ (800) 426-5480 ▪ www.cmafh.com

Dangerous movements! Danger to life, risk of injury, serious injury or property damage!

A **risk assessment** must be prepared for the installation or machine, with its specific conditions, in which the components of the electric drive and control system are installed.

As a result of the risk assessment, the user must provide for monitoring functions and higher-level measures on the installation side for personal safety. The safety regulations applicable to the installation or machine must be taken into consideration. Unintended machine movements or other malfunctions are possible if safety devices are disabled, bypassed or not activated.

To avoid accidents, injury and/or property damage:

- Keep free and clear of the machine's range of motion and moving machine parts. Prevent personnel from accidentally entering the machine's range of motion by using, for example:
  - Safety fences
  - Safety guards
  - Protective coverings
  - Light barriers
- Make sure the safety fences and protective coverings are strong enough to resist maximum possible kinetic energy.
- Mount emergency stopping switches in the immediate reach of the operator. Before commissioning, verify that the emergency stopping equipment works. Do not operate the machine if the emergency stopping switch is not working.
- Prevent unintended start-up. Isolate the drive power connection by means of OFF switches/OFF buttons or use a safe starting lockout.
- Make sure that the drives are brought to safe standstill before accessing or entering the danger zone.
- Additionally secure vertical axes against falling or dropping after switching off the motor power by, for example,
  - mechanically securing the vertical axes,
  - adding an external braking/arrester/clamping mechanism or
  - ensuring sufficient counterbalancing of the vertical axes.
- The standard equipment **motor holding brake** or an external holding brake controlled by the drive controller is **not sufficient to guarantee personal safety**!
- Disconnect electrical power to the components of the electric drive and control system using the master switch and secure them from reconnection ("lock out") for:
  - Maintenance and repair work
  - Cleaning of equipment
  - Long periods of discontinued equipment use
- Prevent the operation of high-frequency, remote control and radio equipment near components of the electric drive and control system and their supply leads. If the use of these devices cannot be avoided, check the machine or installation, at initial commissioning of the electric drive and control system, for possible malfunctions when operating such high-frequency, remote control and radio equipment in its possible positions of

normal use. It might possibly be necessary to perform a special electromagnetic compatibility (EMC) test.

1.1.4 Protection Against Magnetic and Electromagnetic Fields During Operation and Mounting

Magnetic and electromagnetic fields generated by current-carrying conductors or permanent magnets of electric motors represent a serious danger to persons with heart pacemakers, metal implants and hearing aids.

Health hazard for persons with heart pacemakers, metal implants and hearing aids in proximity to electric components!

- Persons with heart pacemakers and metal implants are not allowed to enter the following areas:
  - Areas in which components of the electric drive and control systems are mounted, commissioned and operated.
  - Areas in which parts of motors with permanent magnets are stored, repaired or mounted.
- If it is necessary for somebody with a heart pacemaker to enter such an area, a doctor must be consulted prior to doing so. The noise immunity of implanted heart pacemakers differs so greatly that no general rules can be given.
- Those with metal implants or metal pieces, as well as with hearing aids, must consult a doctor before they enter the areas described above.

1.1.5 Protection Against Contact With Hot Parts

Hot surfaces of components of the electric drive and control system. Risk of burns!

- Do not touch hot surfaces of, for example, braking resistors, heat sinks, supply units and drive controllers, motors, windings and laminated cores!
- According to the operating conditions, temperatures of the surfaces can be **higher than 60 °C** (140 °F) during or after operation.
- Before touching motors after having switched them off, let them cool down for a sufficient period of time. Cooling down can require **up to 140 minutes**! The time required for cooling down is approximately five times the thermal time constant specified in the technical data.
- After switching chokes, supply units and drive controllers off, wait **15 minutes** to allow them to cool down before touching them.
- Wear safety gloves or do not work at hot surfaces.
- For certain applications, and in accordance with the respective safety regulations, the manufacturer of the machine or installation must take measures to avoid injuries caused by burns in the final application. These measures can be, for example: Warnings at the machine or installation, guards (shieldings or barriers) or safety instructions in the application documentation.

1.1.6 Protection During Handling and Mounting

Risk of injury by improper handling! Injury by crushing, shearing, cutting, hitting!

Courtesy of CMA/Flodyne/Hydradyne ▪ Motion Control ▪ Hydraulic ▪ Pneumatic ▪ Electrical ▪ Mechanical ▪ (800) 426-5480 ▪ www.cmafh.com

- Observe the relevant statutory regulations of accident prevention.
- Use suitable equipment for mounting and transport.
- Avoid jamming and crushing by appropriate measures.
- Always use suitable tools. Use special tools if specified.
- Use lifting equipment and tools in the correct manner.
- Use suitable protective equipment (hard hat, safety goggles, safety shoes, safety gloves, for example).
- Do not stand under hanging loads.
- Immediately clean up any spilled liquids from the floor due to the risk of falling!

1.1.7 Battery Safety

Batteries consist of active chemicals in a solid housing. Therefore, improper handling can cause injury or property damage.

Risk of injury by improper handling!

- Do not attempt to reactivate low batteries by heating or other methods (risk of explosion and cauterization).
- Do not attempt to recharge the batteries as this may cause leakage or explosion.
- Do not throw batteries into open flames.
- Do not dismantle batteries.
- When replacing the battery/batteries, do not damage the electrical parts installed in the devices.
- Only use the battery types specified for the product.

☞ Environmental protection and disposal! The batteries contained in the product are considered dangerous goods during land, air, and sea transport (risk of explosion) in the sense of the legal regulations. Dispose of used batteries separately from other waste. Observe the national regulations of your country.

1.2 Appropriate Use

This product may only be used for the applications mentioned in the additional documentations (see index entry "Additional documentations") and under the described application, ambient and operating conditions.

This product is exclusively intended for use in machines and systems in an industrial environment. This is to be understood as applications according to IEC 60204-1 "Safety of machinery, Electric equipment of machines" and NFPA 79 "Electrical Standard for Industrial Machinery".

Courtesy of CMA/Flodyne/Hydradyne ▪ Motion Control ▪ Hydraulic ▪ Pneumatic ▪ Electrical ▪ Mechanical ▪ (800) 426-5480 ▪ www.cmafh.com

Courtesy of CMA/Flodyne/Hydradyne ▪ Motion Control ▪ Hydraulic ▪ Pneumatic ▪ Electrical ▪ Mechanical ▪ (800) 426-5480 ▪ www.cmafh.com

☞ Components of the Rexroth IndraDrive Mi system are **products of category C3** (with limited availability) according to IEC 61800-3. To ensure that this category (limit values) is maintained, suitable line filters must be used in the drive system.

These components are not provided for use in a public low-voltage network supplying residential areas with power. If these components are used in such a public network, high-frequency interference is to be expected. This can require additional measures of radio interference suppression.

Courtesy of CMA/Flodyne/Hydradyne ▪ Motion Control ▪ Hydraulic ▪ Pneumatic ▪ Electrical ▪ Mechanical ▪ (800) 426-5480 ▪ www.cmafh.com

2 Identification

2.1 Type Code

The figure illustrates the basic structure of the type code. Our sales representative will help you with the current status of available versions.

Abbrev. column	1	2	3	4	5	6	7	8	9	10	11	12	13	14	15	16	17	18	19	20	21	22	23	24	25	26	27	28	29	30
Example:	K	C	U	0	2	.	1	N	-	E	T	-	E	T	*	-	0	2	5	-	N	N	-	N	-	N	N	-	N	W

Product
KCU. . . . . = KCU

Line
02 . . . . . .= 02

Design
1 . . . . . = 1

Configuration option
Fixed configuration. . . . . = N

Master communication (Input)
MultiEthernet . . . . . = ET

Master communication (Output)
MultiEthernet . . . . . .= ET*

DC Protection
Nominal current: 25 A. . . . . = 025

Interface
None . . . . . = NN

Control panel
Without . . . . . = N

Other design
None . . . . . = NN

Firmware
Without Firmware. . . . . = NW

DT000073v01_en.FH11

Fig.2-1: Type Code KCU02

Courtesy of CMA/Flodyne/Hydradyne ▪ Motion Control ▪ Hydraulic ▪ Pneumatic ▪ Electrical ▪ Mechanical ▪ (800) 426-5480 ▪ www.cmafh.com

Courtesy of CMA/Flodyne/Hydradyne ▪ Motion Control ▪ Hydraulic ▪ Pneumatic ▪ Electrical ▪ Mechanical ▪ (800) 426-5480 ▪ www.cmafh.com

2.2 Type Plates

Type Plate

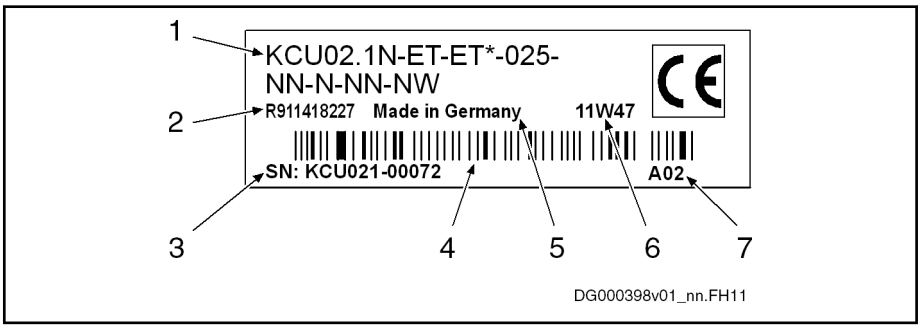

1	Device type
2	Part number
3	Serial number
4	Bar code
5	Country of manufacture
6	Production week; example 11W47: year 2011, week 47
7	Hardware revision index

Fig.2-2: Type Plate

2.3 Scope of Supply

Standard	Optional
KCU02	Basic accessories HAS01.1-050
Instruction Manual (in English)	Accessories for shield connection HAS02.1-015
	Mounting accessories HAS03
	Long Multi-Ethernet cable RKB0011
	Short Multi-Ethernet cable RKB0013

Fig.2-3: Scope of Supply KCU

3 Ratings and Dimensions

UL Ratings and Dimensions

Description	Symbol	Unit	KCU02.1N-ET-ET*-025-NN-N-NN-NW Preliminary
Listing according to UL standard (UL)			tbd
Listing according to CSA standard (UL)			tbd
UL files (UL)			tbd
Degree of protection according to IEC60529			IP20
Mass	m	kg	3,80
Device height (UL)[1)]	H	mm	352
Device depth (UL)[2)]	T	mm	252
Device width (UL)[3)]	B	mm	50
Minimum distance on the top of the device[4)]	d_{top}	mm	80
Minimum distance on the bottom of the device[5)]	d_{bot}	mm	110
Horizontal spacing on the device[6)]	d_{hor}	mm	0
Data control voltage - Input			
Rated control voltage input (UL)[7)]	U_{N3}	V	24 ± 20 %
Rated power consumption control voltage input at U_{N3} (UL)[8)]	P_{N3}	W	675
Data control voltage - Output			
Rated control voltage output (UL)	U_{out}	V	42,0
Rated control power output (UL)	P_{out}	W	588,0
Data power section - Input			
Short circuit current rating (UL)	SCCR	A rms	tbd
Rated input voltage, power (UL) [9)]	U_{LN_nenn}	V	DC 540...750
Rated input current (UL)	I_{LN}	A	25,0
Data power section - Output			
Output voltage (UL)	U_{out}	V	DC 540...750
Output current (UL)	I_{out}	A	25,0
			Last modification: 2011-07-07

Courtesy of CMA/Flodyne/Hydradyne ▪ Motion Control ▪ Hydraulic ▪ Pneumatic ▪ Electrical ▪ Mechanical ▪ (800) 426-5480 ▪ www.cmafh.com

Courtesy of CMA/Flodyne/Hydradyne ▪ Motion Control ▪ Hydraulic ▪ Pneumatic ▪ Electrical ▪ Mechanical ▪ (800) 426-5480 ▪ www.cmafh.com

Ratings and Dimensions

1) 2) 3)	Housing dimension; see also related dimensional drawing
4) 5) 6)	See fig. "Air Intake and Air Outlet at Device"
7)	Observe supply voltage for motor holding brakes
8)	HMS, HMD, HCS plus motor holding brake and control section; HCS01 including control section
9)	DC bus L+, L-; mains input L1, L2, L3

Fig.3-1: KCU - UL Ratings and Dimensions

Distances

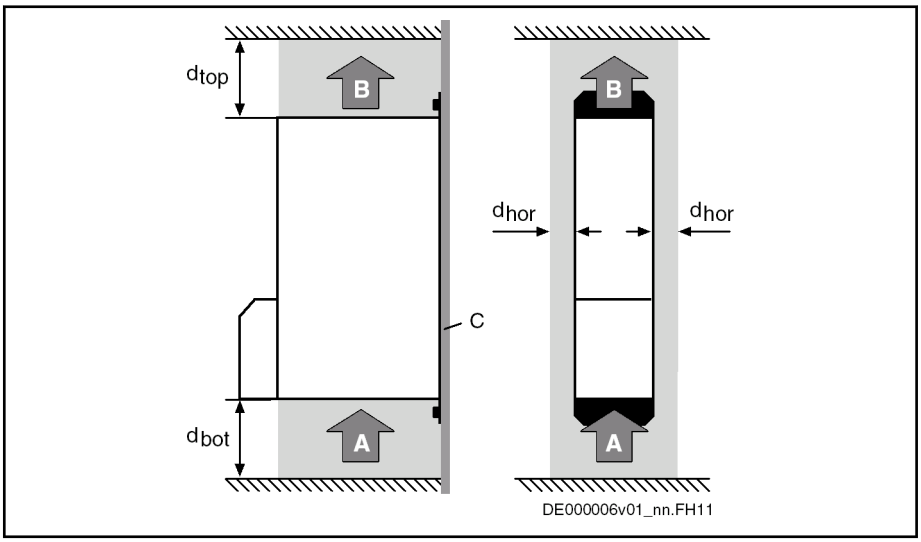

A	Air intake
B	Air outlet
C	Mounting surface in control cabinet
d_{top}	Distance top
d_{bot}	Distance bottom
d_{hor}	Distance horizontal

Fig.3-2: Air Intake and Air Outlet at Device

Courtesy of CMA/Flodyne/Hydradyne ▪ Motion Control ▪ Hydraulic ▪ Pneumatic ▪ Electrical ▪ Mechanical ▪ (800) 426-5480 ▪ www.cmafh.com

4 Documentations

4.1 Drive Systems, System Components

Title Rexroth IndraDrive …	Kind of documentation	Document type code[1)] DOK-INDRV*-…	Parts number R911…
Mi Drive Systems With KCU02, KSM02, KMS02	Project Planning Manual	KCU02+KSM02-PRxx-EN-P	335702
Drive Systems With HMV01/02 HMS01/02, HMD01, HCS02/03	Project Planning Manual	SYSTEM*****-PRxx-EN-P	309635
Cs Drive Systems With HCS01	Project Planning Manual	HCS01******-PRxx-EN-P	322209
Supply Units, Power Sections HMV, HMS, HMD, HCS02, HCS03	Project Planning Manual	HMV-S-D+HCS-PRxx-EN-P	318789
Drive Controllers Control Sections CSB01, CSH01, CDB01	Project Planning Manual	CSH********-PRxx-EN-P	295011
Additional Components and Accessories	Project Planning Manual	ADDCOMP****-PRxx-EN-P	306139
C Drive Controllers HCS02.1, HCS03.1	Operating Instructions	FU**********-IBxx-EN-P	314904

1) In the document type codes, "xx" is a wild card for the current edition of the documentation (example: PR01 is the first edition of a Project Planning Manual)

Fig.4-1: Documentations – Overview

Title	Kind of documentation	Document type code[1)]	Parts number R911…
Automation Terminals Of The Rexroth Inline Product Range	Application Manual	DOK-CONTRL-ILSYSINS***-AWxx-EN-P	317017

1) In the document type codes, "xx" is a wild card for the current edition of the documentation (example: AW01 is the first edition of an Application Manual)

Fig.4-2: Documentations – Overview

4.2 Motors

Title Rexroth IndraDyn …	Kind of documentation	Document type code[1)] DOK-MOTOR*-…	Parts number R911…
A Asynchronous Motors MAD / MAF	Project Planning Manual	MAD/MAF****-PRxx-EN-P	295054
H Synchronous Kit Spindle Motors	Project Planning Manual	MBS-H******-PRxx-EN-P	297894
L Synchronous Linear Motors	Project Planning Manual	MLF********-PRxx-EN-P	293634

Courtesy of CMA/Flodyne/Hydradyne ▪ Motion Control ▪ Hydraulic ▪ Pneumatic ▪ Electrical ▪ Mechanical ▪ (800) 426-5480 ▪ www.cmafh.com

Documentations

Title Rexroth IndraDyn …	Kind of documentation	Document type code[1)] DOK-MOTOR*-…	Parts number R911…
S Synchronous Motors MSK	Project Planning Manual	MSK********-PRxx-EN-P	296288
T Synchronous Torque Motors	Project Planning Manual	MBT********-PRxx-EN-P	291224

1) In the document type codes, "xx" is a wild card for the current edition of the documentation (example: PR01 is the first edition of a Project Planning Manual)

Fig.4-3: Documentations – Overview

4.3 Cables

Title	Kind of documentation	Document type code[1)] DOK-…	Parts number R911…
Rexroth Connection Cables IndraDrive and IndraDyn	Selection Data	CONNEC-CABLE*INDRV-CAxx-EN-P	322948

1) In the document type codes, "xx" is a wild card for the current edition of the documentation (example: CA02 is the second edition of the documentation "Selection Data")

Fig.4-4: Documentations – Overview

4.4 Firmware

Title Rexroth IndraDrive ...	Kind of documentation	Document type code[1)] DOK-INDRV*-…	Parts number R911…
MPx-17 Functions	Application Manual	MP*-17VRS**-APxx-EN-P	331235
MPx-17 Version Notes	Release Notes	MP*-17VRS**-RNxx-EN-P	331587
MPx-16 and MPx-17 Parameters	Reference Book	GEN1-PARA**-RExx-EN-P	328650
MPx-16 and MPx-17 Diagnostic Messages	Reference Book	GEN1-DIAG**-RExx-EN-P	326539
Integrated Safety Technology as of MPx-1x	Application Manual	SI3-**VRS**-APxx-EN-P	332633

1) In the document type codes, "xx" is a wild card for the current edition of the documentation (example: RE02 is the second edition of a Reference Book)

Fig.4-5: Documentations – Firmware

5 Instructions for Use

5.1 General

☞ The electronic control system KCU02 may only be used in conjunction with HMV01, HMV02, HCS02 or HCS03.

☞ **Short circuit current rating (SCCR)**

Suitable for use on a circuit capable of delivering not more than 42000 rms symmetrical amperes.

5.2 Touch Guard

⚠ WARNING **Lethal electric shock by live parts with more than 50 V!**

- The appropriate **touch guard** must be mounted for each device following connection work.

  Never operate the device without mounted touch guard.
- Never mount a damaged touch guard.
- Immediately replace a damaged touch guard by an undamaged touch guard.
- Keep the cutouts at the touch guard as small as possible. Only remove the cutouts if necessary.

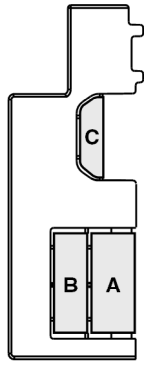

DG000456v01_nn.FH11

Cutouts at the Touch Guard

- If the DC bus and the control voltage are connected by means of **contact bars**, only **cutout A** may be removed from the touch guard.
- If the DC bus and the control voltage are connected by means of **cables** (e.g. in case of multiple-line arrangement), **cutouts A, B and C** may be removed from the touch guard.
- At the first and last device in a line of interconnected devices, cutouts may **not** be removed from the outer side of the touch guard.

Fig.5-1: Cutouts at the Touch Guard

Courtesy of CMA/Flodyne/Hydradyne ▪ Motion Control ▪ Hydraulic ▪ Pneumatic ▪ Electrical ▪ Mechanical ▪ (800) 426-5480 ▪ www.cmafh.com

Courtesy of CMA/Flodyne/Hydradyne ▪ Motion Control ▪ Hydraulic ▪ Pneumatic ▪ Electrical ▪ Mechanical ▪ (800) 426-5480 ▪ www.cmafh.com

Instructions for Use

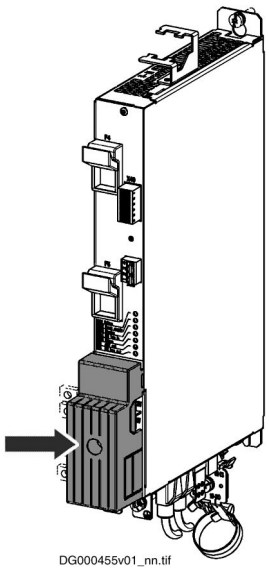	The touch guard is fixed to the device with a screw. Tightening torque: **Max. 2.8 Nm**

Fig.5-2: Touch Guard at Device

Courtesy of CMA/Flodyne/Hydradyne ▪ Motion Control ▪ Hydraulic ▪ Pneumatic ▪ Electrical ▪ Mechanical ▪ (800) 426-5480 ▪ www.cmafh.com

5.3 Connection Points

5.3.1 Wiring Diagrams

Wiring Diagram with HMV01 as Supply Unit und KSM as Power Section

Rexroth IndraDrive Mi System With HMV01 Supply Unit:

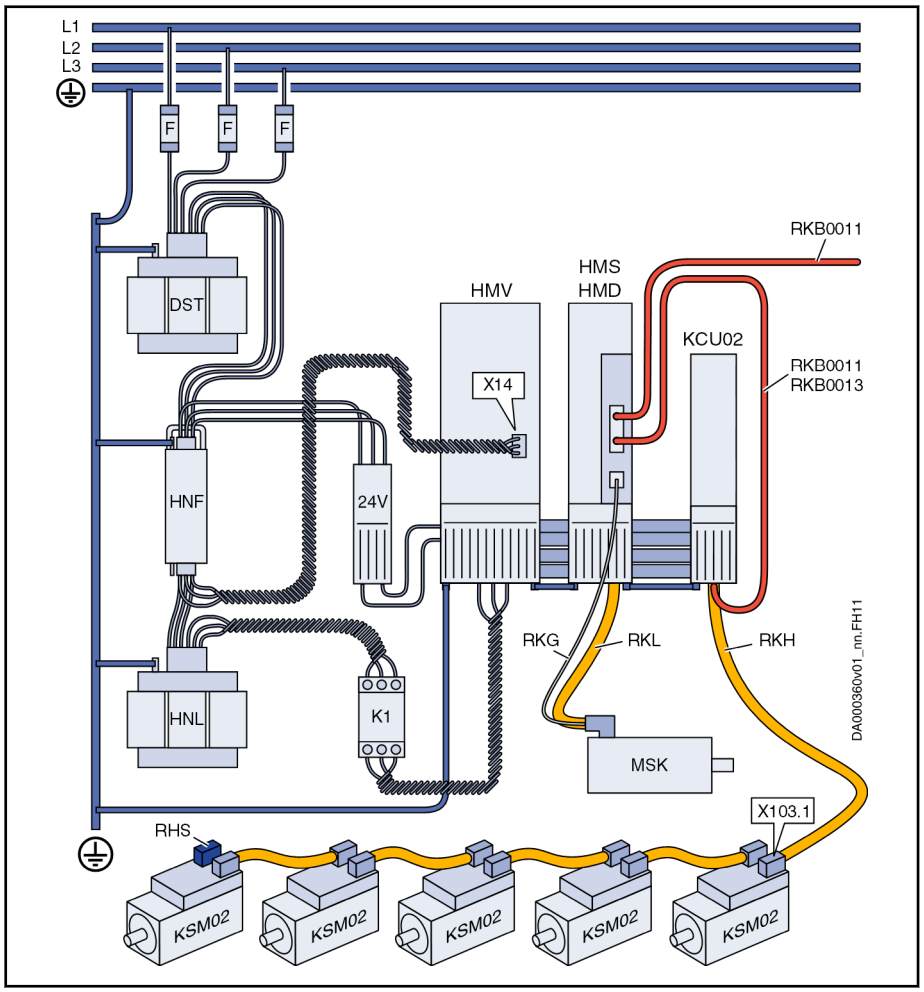

24V	24-V supply
DST	Transformer (optional)
F	Fuses
HMD, HMS	Inverter (optional)
HMV01	Supply unit
HNF	Line filter
HNL	Line reactor
K1	Line contactor (only for supply units without integrated line contactor, e.g. HMV01.1R-W0120)
KCU	Electronic control system
KSM	Distributed servo drive
MSK	Servo motor (optional)
RHS	Terminal connector
RKB	Communication cable
RKG	Encoder cable (optional)
RKH	Hybrid cable
RKL	Motor cable (optional)
X14	Power synchronization (only with regenerative HMVs)
X103.1	Connection of hybrid cable RKH at first KSM

Fig.5-3: Rexroth IndraDrive Mi System With HMV01

Courtesy of CMA/Flodyne/Hydradyne ▪ Motion Control ▪ Hydraulic ▪ Pneumatic ▪ Electrical ▪ Mechanical ▪ (800) 426-5480 ▪ www.cmafh.com

Instructions for Use

Wiring Diagram with HCS02 as Supply Unit und KSM as Power Section

Rexroth IndraDrive Mi System With HCS02 Supply Unit:

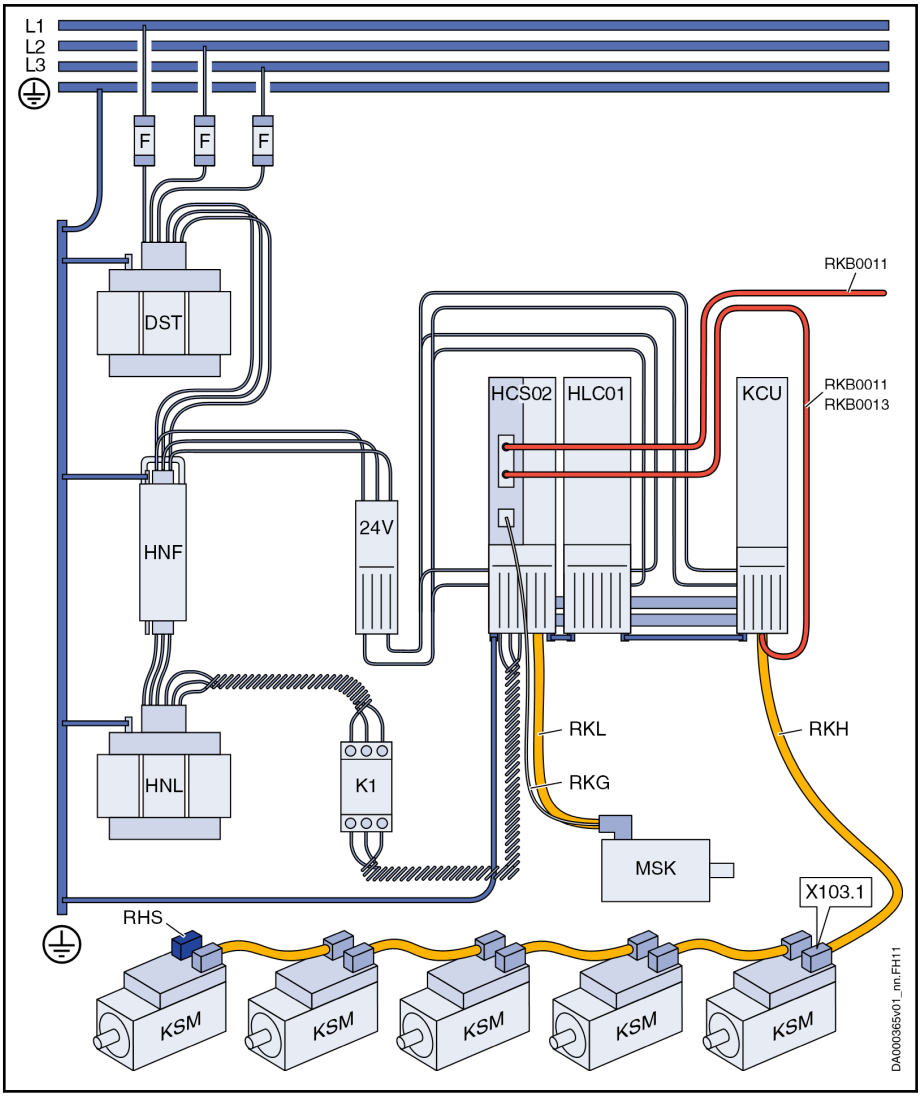

DST	Transformer (optional)
F	Fuses
HCS02	Converter (HCS02.1E-W0054 or HCS02.1E-W0070)
HNF	Line filter
HNL	Line reactor (optional)
HLC01	DC bus capacitor unit (optional only with low load of motor output at HCS02)
K1	Line contactor
KCU	Electronic control system
KSM	Distributed servo drive
MSK	Servo motor
24V	24-V supply
RHS	Terminal connector
RKB	Communication cable
RKG	Encoder cable
RKH	Hybrid cable
RKL	Motor cable
X103.1	Connection of hybrid cable at first KSM

Fig.5-4: Rexroth IndraDrive Mi System With HCS02

Courtesy of CMA/Flodyne/Hydradyne ▪ Motion Control ▪ Hydraulic ▪ Pneumatic ▪ Electrical ▪ Mechanical ▪ (800) 426-5480 ▪ www.cmafh.com

Wiring Diagram with HCS03 as Supply Unit und KSM as Power Section

Rexroth IndraDrive Mi System With HCS03 Supply Unit:

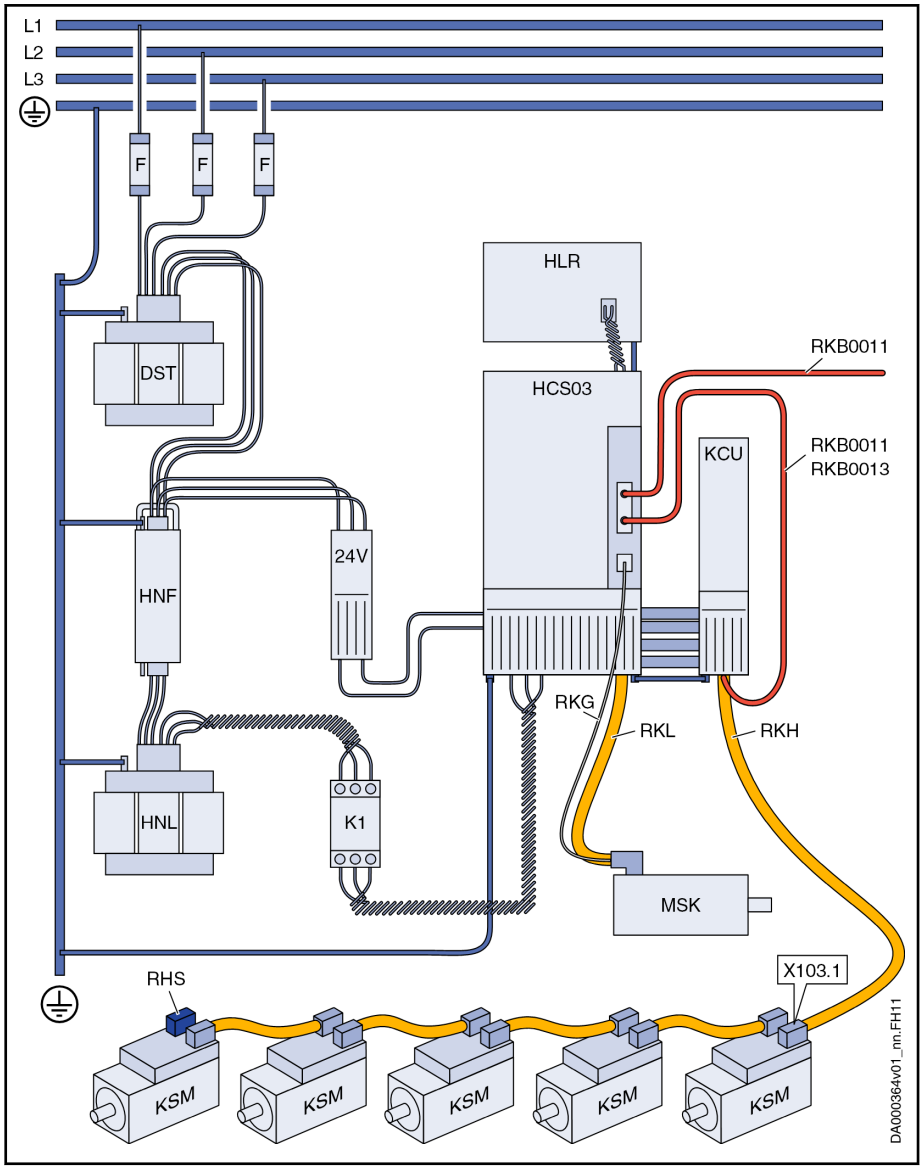

Courtesy of CMA/Flodyne/Hydradyne ▪ Motion Control ▪ Hydraulic ▪ Pneumatic ▪ Electrical ▪ Mechanical ▪ (800) 426-5480 ▪ www.cmafh.com

DST	Transformer (optional)
F	Fuses
HCS03	Converter
HLR	Braking resistor (optional)
HNF	Line filter
HNL	Line reactor (optional)
K1	Line contactor
KCU	Electronic control system
KSM	Distributed servo drive
MSK	Servo motor
RHS	Terminal connector
RKB	Communication cable
RKH	Hybrid cable
RKG	Encoder cable
RKL	Motor cable
24V	24-V supply
X103.1	Connection of hybrid cable at first KSM

Fig.5-5: Rexroth IndraDrive Mi System With HCS03

Courtesy of CMA/Flodyne/Hydradyne ▪ Motion Control ▪ Hydraulic ▪ Pneumatic ▪ Electrical ▪ Mechanical ▪ (800) 426-5480 ▪ www.cmafh.com

Wiring Diagram with HMV02 as Supply Unit und KSM as Power Section

Rexroth IndraDrive Mi System With HMV02 Supply Unit:

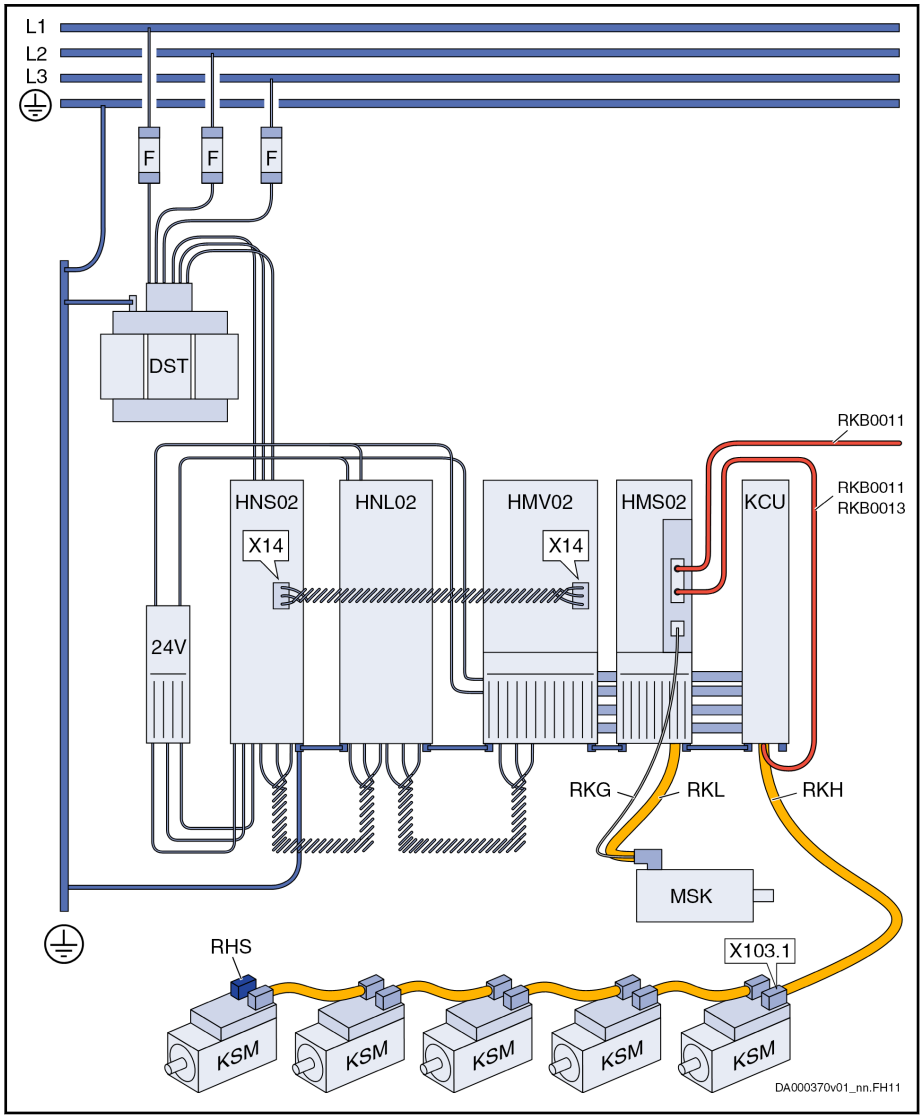

24V	24-V supply
DST	Transformer (optional)
F	Fuses
HMS02	Inverter (optional)
HMV02	Supply unit
HNS02	Line filter with switch-disconnector
HNL02	Line reactor
KCU	Electronic control system
KSM	Distributed servo drive
MSK	Servo motor (optional)
RHS	Terminal connector
RKB	Communication cable
RKG	Encoder cable (optional)
RKH	Hybrid cable
RKL	Motor cable (optional)
X14	Power synchronization (only with regenerative HMVs)
X103.1	Connection of hybrid cable RKH at first KSM

Fig.5-6: Rexroth IndraDrive Mi System With HMV02

Instructions for Use

5.3.2 Connection Diagram

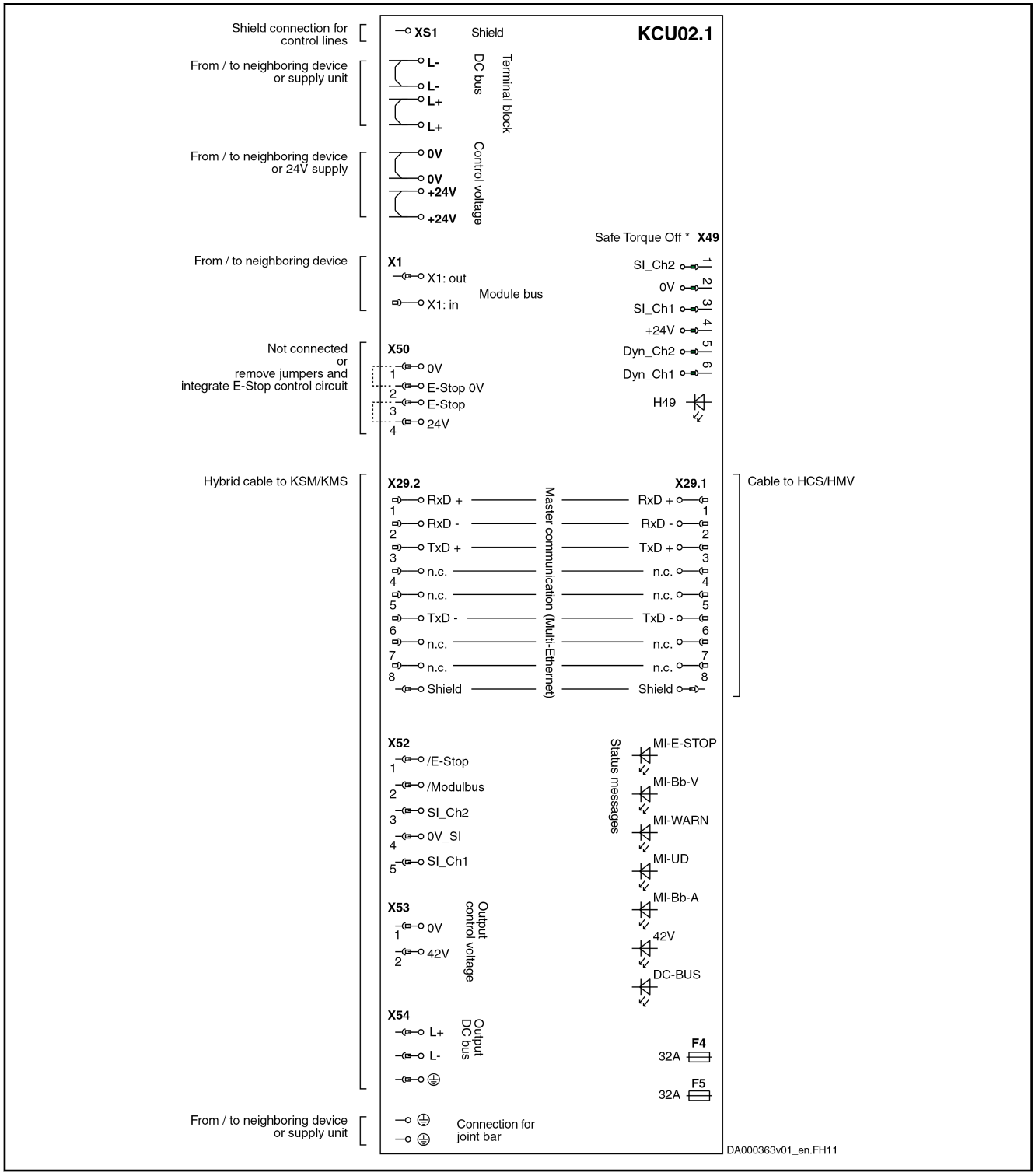

* Optional

Fig.5-7: Connection Diagram KCU02

Courtesy of CMA/Flodyne/Hydradyne ▪ Motion Control ▪ Hydraulic ▪ Pneumatic ▪ Electrical ▪ Mechanical ▪ (800) 426-5480 ▪ www.cmafh.com

Courtesy of CMA/Flodyne/Hydradyne ▪ Motion Control ▪ Hydraulic ▪ Pneumatic ▪ Electrical ▪ Mechanical ▪ (800) 426-5480 ▪ www.cmafh.com

5.3.3 Position of Connection Points

Figure	Element	Significance	Notes
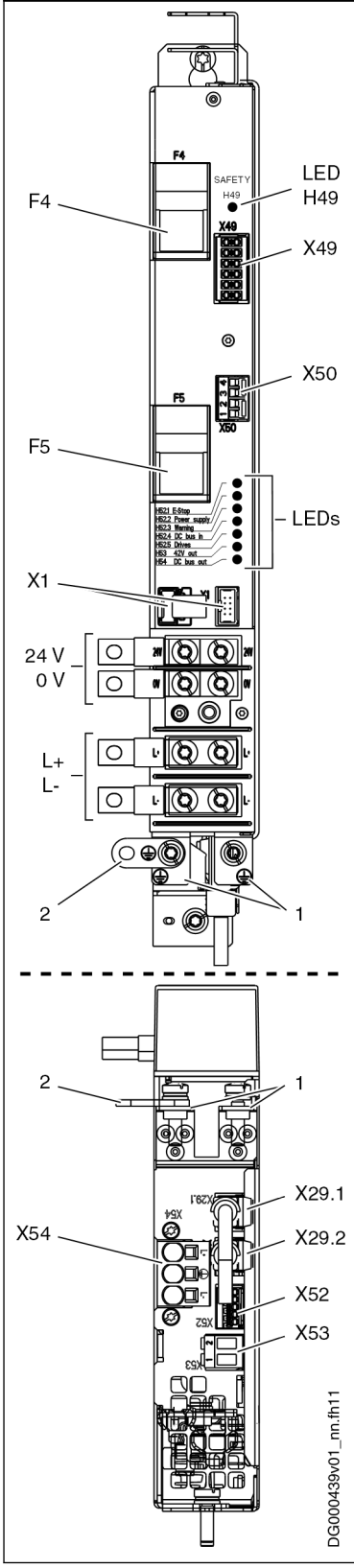	1	Equipment grounding conductor	For connection to the equipment grounding system
	2	Joint bar of equipment grounding conductor	For connection to neighboring device (part of basic accessory HAS01)
	F4	Fuse for output X54 (L+)	30 A
	F5	Fuse for output X54 (L-)	30 A
	LEDs	H49: Safety	See index entry "KCU02 → LEDs"
		H52.1: E-Stop	
		H52.2: Power Supply	
		H52.3: Warning	
		H52.4: DC Bus In	
		H52.5: Drives	
		H53: 42 V Out	
		H54: DC Bus Out	
	24 V, 0 V	Control voltage	For connection to supply unit via contact bars (part of basic accessory HAS01)
	L+, L-	DC bus	For connection to supply unit via contact bars (part of basic accessory HAS01)
	X1	Module bus	Keep ribbon cable in parking position, when there is no connection to neighboring device.
	X29.1 X29.2	Multi-Ethernet	Signals are looped through
	X49	Safety technology	L3 (Safe Torque Off)
	X50	E-Stop	E-Stop input
	X52	Status messages	For exchanging status messages
	X53	42 V, 0 V	42 V output; control voltage supply
	X54	DC bus, equipment grounding conductor	DC bus output; power supply

Fig.5-8: KCU02 connection points

Courtesy of CMA/Flodyne/Hydradyne ▪ Motion Control ▪ Hydraulic ▪ Pneumatic ▪ Electrical ▪ Mechanical ▪ (800) 426-5480 ▪ www.cmafh.com

☞ Do not operate any devices at the KCU02 other than distributed servo drives KSM02 or distributed drive controllers KMS02.

For the correct and safe function of the drive, **all** connection points must be connected.

Use the hybrid cable RKH by Rexroth at X29.1 or X29.2, X52, X53 and X54.

5.3.4 Connection Point of Equipment Grounding Conductor

⚠ WARNING **Dangerous contact voltage at device housing! Lethal electric shock!**

The devices of the Rexroth IndraDrive Mi product range are devices with increased leakage current (greater than AC 3.5 mA or DC 10 mA).

Therefore, always install a stationary connection for the equipment grounding conductor.

In a Rexroth IndraDrive Mi drive system, connect the equipment grounding conductor connections of all devices and additional components to the equipment grounding system.

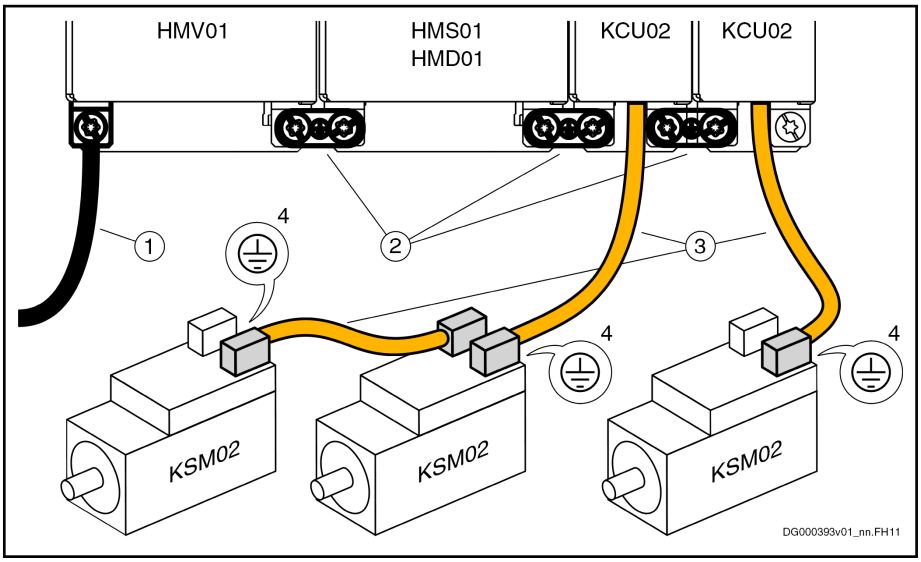

1	Connection point of equipment grounding conductor at supply unit with connection to equipment grounding system
2	Joint bars connect equipment grounding conductors of neighboring devices
3	Hybrid cables connect equipment grounding conductors of KSM02/ KMS02 devices to each other and to the equipment grounding conductor of the KCU02
4	Second connection point of equipment grounding conductor (see index entry "Connection → Second connection point of equipment grounding conductor")

Fig.5-9: Connection Point of Equipment Grounding Conductor

☞ The connection point of the equipment grounding conductor shown above also applies to distributed KMS02 drive controllers.

Courtesy of CMA/Flodyne/Hydradyne ▪ Motion Control ▪ Hydraulic ▪ Pneumatic ▪ Electrical ▪ Mechanical ▪ (800) 426-5480 ▪ www.cmafh.com

5.3.5 Ground Connection

NOTICE **Risk of damage to the devices by spark discharge of static charges**

In some applications (e.g. printing or packaging), high static charges can develop. Make sure that these charges can be directly discharged against ground at their point of origin. Therefore, connect the second connection point of the equipment grounding conductor at the KSM02/KMS02 to the equipment grounding system of the installation.

The ground connection of the housing is used to provide functional safety of the devices and protection against contact in conjunction with the equipment grounding conductor.

Ground the housings of the devices:

1. Make a conductive connection between the bare metal back panel of the devices and the mounting surface in the control cabinet. To do this, use the supplied mounting screws.
2. Make a conductive connection between the mounting surface of the control cabinet and the equipment grounding system.

2 Drive Lines

If 2 drive lines are connected from terminal connector to terminal connector, potential equalization (ground connection) is required between the drive lines.

5.3.6 Terminal Block, 24 - 0V (24V Supply)

PELV[1] for 24V power supply unit

For the 24V supply of the devices of the Rexroth IndraDrive Mi range, use a power supply unit or a control-power transformer with protection by PELV according to IEC 60204-1 (section 6.4).

In the scope of CSA/UL, the data of the control-power transformer are limited to:

- Max. output voltage: 42.4 V_{peak} or 30 V_{ac}
- Max. output power: 10000 VA

Technical Data of the Connection Point

View	Identification	Function
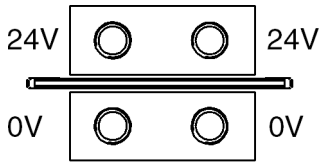 DA000175v01_nn.FH11	+24V	Power supply Connection to neighboring devices with contact bars from accessory HAS01.1
	0V	Reference potential for power supply Connection to neighboring devices with contact bars from accessory HAS01.1

1) *Protective Extra Low Voltage*

Courtesy of CMA/Flodyne/Hydradyne ▪ Motion Control ▪ Hydraulic ▪ Pneumatic ▪ Electrical ▪ Mechanical ▪ (800) 426-5480 ▪ www.cmafh.com

Instructions for Use

Screw connection M6 thread at device (terminal block)	**Unit**	**Min.**	**Max.**
Tightening torque	Nm	5,5	6,5
Power consumption	W	P_{N3} (see technical data)	
Voltage load capacity	V	U_{N3} (see technical data)	
Polarity reversal protection		Within the allowed voltage range by internal protective diode	
Current carrying capacity "looping through" from 24V to 24V, 0V to 0V (contact bars in scope of supply of accessory HAS01)			
With contact bars -072	A	220	

Fig.5-10: Function, Pin Assignment, Properties

HCS02	**HCS03, HMV01, HMV02**
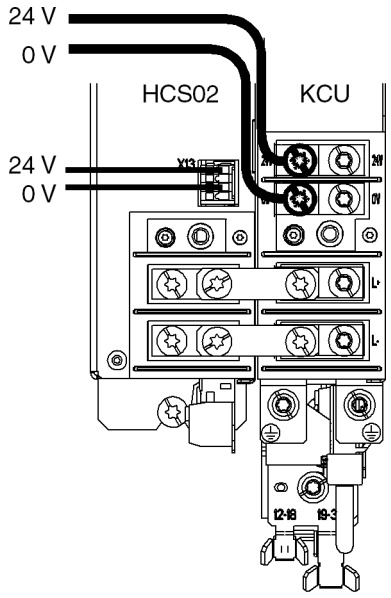 DG000221v01_nn.FH11 For HCS02 devices, the 24V supply is connected to the electronic control system KCU with **cables** (cross section: min. 6 mm² (AWG 10)).	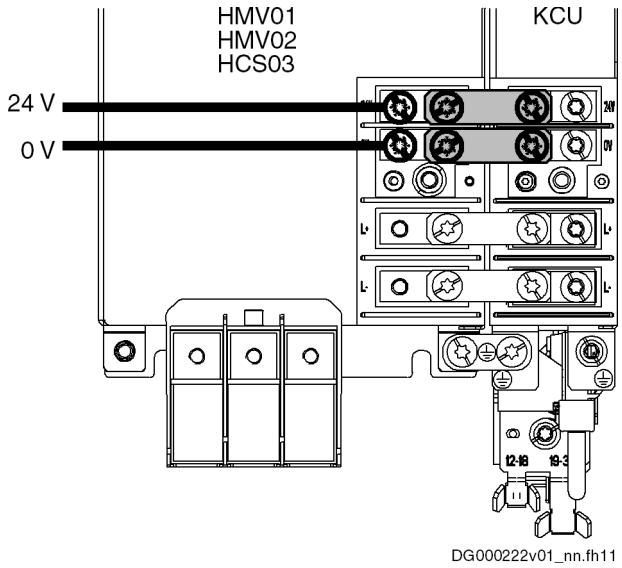 DG000222v01_nn.fh11 For HCS03, HMV01 and HMV02 devices, the 24V supply is connected to the electronic control system KCU with **contact bars**.

Fig.5-11: Connecting the 24V supply

5.3.7 Terminal Block L+, L- (DC Bus Connection)

⚠ WARNING **Lethal electric shock by live parts with more than 50 V!**

Before working on live parts: De-energize installation and secure power switch against unintentional or unauthorized re-energization.

Wait at least **30 minutes** after switching off the supply voltages to allow **discharging**.

Check whether voltage has fallen below 50 V before touching live parts!

Courtesy of CMA/Flodyne/Hydradyne ▪ Motion Control ▪ Hydraulic ▪ Pneumatic ▪ Electrical ▪ Mechanical ▪ (800) 426-5480 ▪ www.cmafh.com

Technical Data of the Connection Point

View	Identification	Function
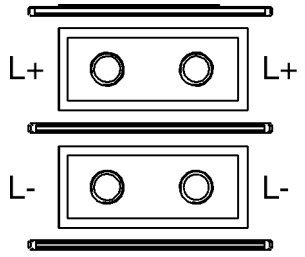	L+ L-	Connection points for connecting DC bus connections

Screw connection M6 thread at device (terminal block)	Unit	Min.	Max.
Tightening torque	Nm	5,5	6,5
Short circuit protection		Via fusing elements connected in the incoming circuit to the mains connection	
Overload protection		Via fusing elements connected in the incoming circuit to the mains connection	
Current carrying capacity "looping through" from L+ to L+, L- to L- (contact bars in scope of supply of accessory HAS01)			
With contact bars -072	A		220
Additionally with contact bars -042 and end piece	A		245

Fig.5-12: Function, Pin Assignment, Properties

Courtesy of CMA/Flodyne/Hydradyne ▪ Motion Control ▪ Hydraulic ▪ Pneumatic ▪ Electrical ▪ Mechanical ▪ (800) 426-5480 ▪ www.cmafh.com

Instructions for Use

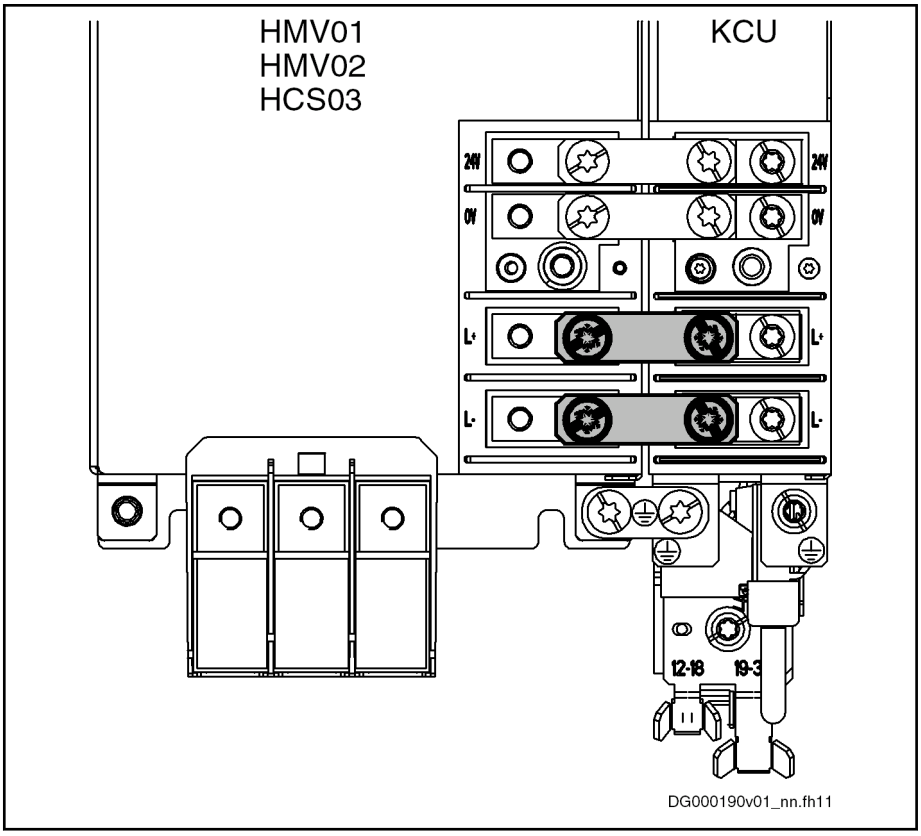

Fig.5-13: Connection of Contact Bars

5.3.8 X49, L3 - Safe Torque Off

Data

View	Identification	Function
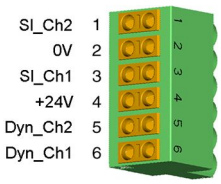	X49	Safe Torque Off

Spring terminal (connector)	Unit	Min.	Max.
Connection cable	mm^2	1	1,5
Stranded wire	AWG	16	16
Stripped length	mm	8	
Output current per output	mA	-	350
24-V supply input current	mA	-	700
Voltage load	V	-	60
Polarity reversal protection for power supply	-	Present	

Fig.5-14: Data

Pin Assignment, Function

Function	Signal	Connection	Technical data
Selection of channel 1	SI_Ch1	3	Digital inputs [1]
Selection of channel 2	SI_Ch2	1	
Dynamization output of channel 1	Dyn_Ch1	6	Digital outputs [2]
Dynamization output of channel 2	Dyn_Ch2	5	
Power supply of **isolated** inputs and outputs	+24V	4	DC 19.2 … 30 V Min. 100 mA Max. 700 mA X49 must be supplied with voltage from outside (e.g. external 24-V voltage supply). Connection point X50 (E-stop input) may not be used for supplying X49 with voltage.
	0V	2	

1) See index entry "Digital inputs → Technical data, safety technology"
2) See index entry "Digital outputs → Technical data, safety technology"

Fig.5-15: Pin assignment, function

☞ When the dynamization outputs do not work, check the power supply connection. Perhaps the polarity has been reversed.

Courtesy of CMA/Flodyne/Hydradyne ▪ Motion Control ▪ Hydraulic ▪ Pneumatic ▪ Electrical ▪ Mechanical ▪ (800) 426-5480 ▪ www.cmafh.com

Courtesy of CMA/Flodyne/Hydradyne ▪ Motion Control ▪ Hydraulic ▪ Pneumatic ▪ Electrical ▪ Mechanical ▪ (800) 426-5480 ▪ www.cmafh.com

Instructions for Use

5.4 Installation

5.4.1 General Information on How to Install the Drive Controller

⚠ WARNING **Lethal electric shock by live parts with more than 50 V!**

Before working on live parts: De-energize installation and secure power switch against unintentional or unauthorized re-energization.

Wait at least **30 minutes** after switching off the supply voltages to allow **discharging**.

Check whether voltage has fallen below 50 V before touching live parts!

Damage can be caused to the drive controller or circuit boards if electrostatic charging present in people and/or tools is discharged across them. For this reason, please observe the following information:

NOTICE **Electrostatic charges can cause damage to electronic components and interfere with their operational safety!**

Exposed conductive parts coming into contact with components and circuit boards must be discharged by means of grounding. Otherwise errors may occur when controlling motors and moving elements.

Such exposed conductive parts include:

- The copper bit when soldering
- The human body (ground connection by touching a conductive, grounded object)
- Parts and tools (place them on a conductive support)

Endangered components may only be stored or dispatched in conductive packaging.

☞ Rexroth connection diagrams are only to be used for producing installation circuit diagrams! The machine manufacturer's installation circuit diagrams must be used for wiring the installation!

- Lay signal lines separately from the load resistance lines because of the occurrence of interference.
- Transmit analog signals (e.g. command values, actual values) via shielded lines.
- Do not connect mains, DC bus or power cores to low voltages or allow them to come into contact with these.
- When carrying out a high voltage test or an applied-overvoltage withstand test on the machine's electrical equipment, disconnect all connections to the devices. This protects the electronic components (allowed in accordance with EN 60204-1). During their routine testing, Rexroth drive components are tested for high voltage (in accordance with EN 61800-5-1:2007, section 5.2.3.2) and insulation (in accordance with EN 60204-1:2006, section 18.3).

Courtesy of CMA/Flodyne/Hydradyne ▪ Motion Control ▪ Hydraulic ▪ Pneumatic ▪ Electrical ▪ Mechanical ▪ (800) 426-5480 ▪ www.cmafh.com

NOTICE **Risk of damage to the drive controller by connecting and disconnecting live connections!**

Do not connect and disconnect live connections.

5.5 Diagnostic Display KCU02

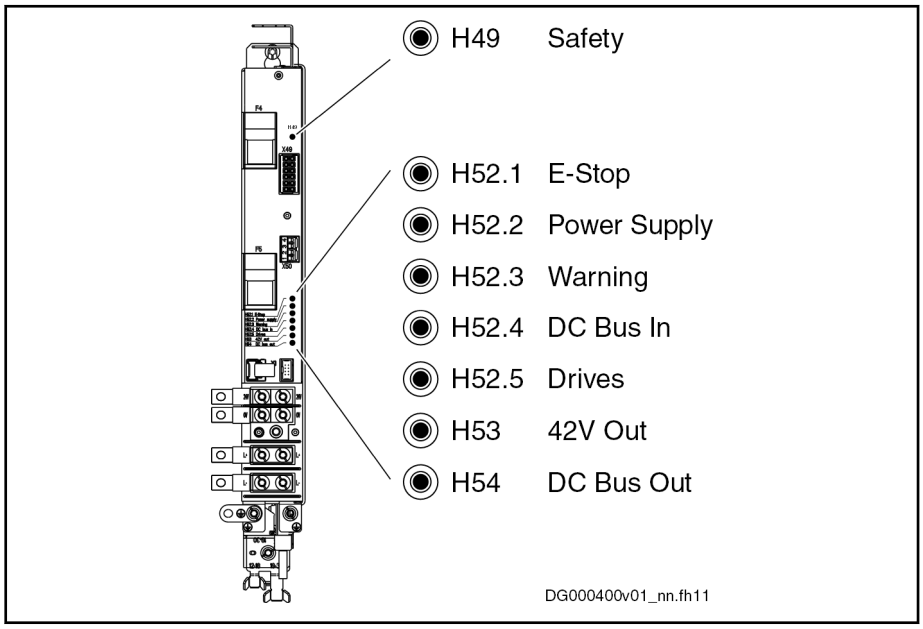

Fig.5-16: LEDs on KCU02

LED	Color / status		Significance	Measures
H49 Safety		Green	Signals without error	None
		Red	Signals with error (Error is saved until device is switched off.)	Check wiring of safety technology for short-circuit.
H52.1 E-stop		Off	E-stop not activated	Deactivate E-stop, if necessary
		Red	E-stop active (/E_Stop)	Activate E-stop, if necessary (see connection point X50)
H52.2 Power Supply		Green	Supply unit without error, regular status	None
		Red	Supply unit signals error (/Bb_V)	Check power supply, see also "F2086 Error supply module"
H52.3 Warning		Green	Supply unit without warning (/Warn), regular status	None
		Red	Supply unit signals warning	Check supply unit, see also "E2086 Prewarning supply module overload"

Courtesy of CMA/Flodyne/Hydradyne ▪ Motion Control ▪ Hydraulic ▪ Pneumatic ▪ Electrical ▪ Mechanical ▪ (800) 426-5480 ▪ www.cmafh.com

Instructions for Use

LED	Color / status		Significance	Measures
H52.4 DC Bus In	○	Off	DC bus voltage (L+; L-) too low	Switch power on at supply unit
			Module bus not connected (if H54 green)	Connect module bus (connection point X1)
	✳	Green	DC bus voltage (L+; L-) without error (Ud), regular status	None
H52.5 Drives	✳	Green	No error at module bus, regular status	None
	✳	Red	Module bus error (/Bb_A)	• Check module bus wiring • Check control voltage supply of the devices; see also "F2087 Module group communication error"
	✳	Red/ green Flashing	Drive system carries out error reaction (Bb_A)	Make device at module bus ready for operation; see also diagnostic message "E2810 Drive system not ready for operation"
H53 42V Out	✳	Green	Control voltage for KSM at output X53 okay	None
	✳	Red	Control voltage for KSM at output X53 faulty or control voltage outside of tolerances Error is saved until device is switched off	Overload at output: • Check control voltage supply • Check voltage at X53 • Reduce load • Remove short circuit
H54 DC Bus Out	○	Off	DC bus (L+, L-) not ready for power output	None
	✳	Green	DC bus (L+, L-) ready for power output	None
	✳	Red	DC bus voltage (L+; L-) at output X54 not okay	Check fuses F4, F5 and replace them, if necessary

Fig.5-17: LED Displays KCU02

5.6 Replacing Fuses F4 and F5

⚠ WARNING **Lethal electric shock by live parts with more than 50 V!**

Before working on live parts: De-energize installation and secure power switch against unintentional or unauthorized re-energization.

Wait at least **30 minutes** after switching off the supply voltages to allow **discharging**.

Check whether voltage has fallen below 50 V before touching live parts!

Courtesy of CMA/Flodyne/Hydradyne ▪ Motion Control ▪ Hydraulic ▪ Pneumatic ▪ Electrical ▪ Mechanical ▪ (800) 426-5480 ▪ www.cmafh.com

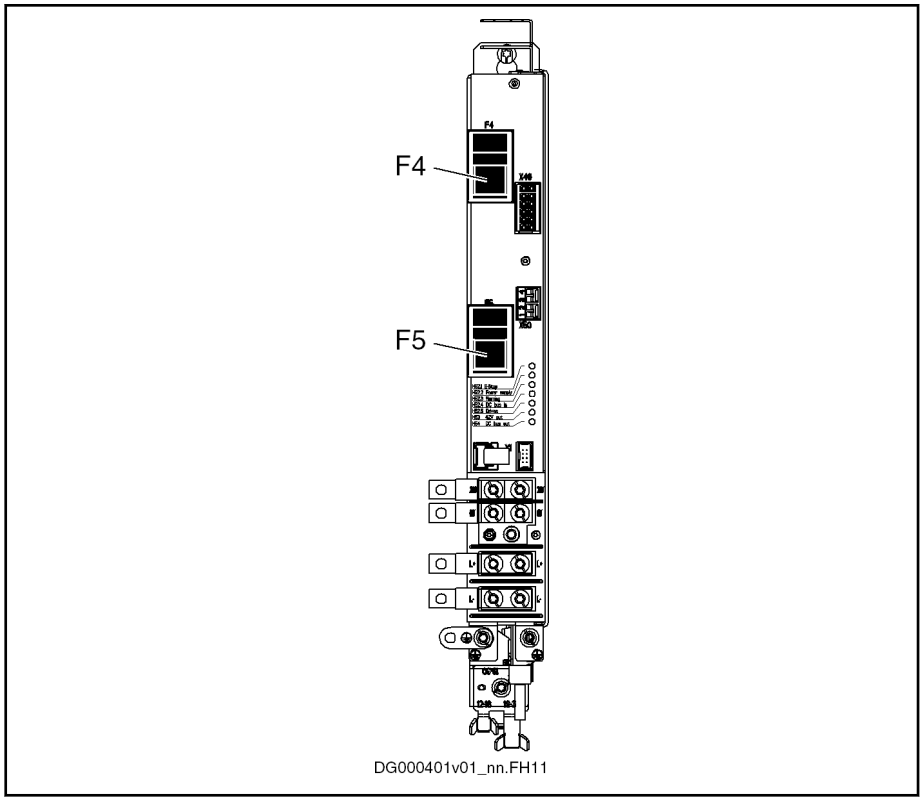

Fig.5-18: Fuses F4 and F5

Replacing fuses F4 and F5

1. Switch off power voltage to drive system.
2. Wait at least 30 minutes until discharge time has elapsed.
3. Open fuse carriers F4 and F5.
4. Remove fuses F4 and F5.

   Note: Always replace both fuses, even if only one of them is defective. Probably, the intact fuse is already damaged.
5. Insert new **WP-30A14Fa** fuses by BUSSMANN.
6. Close fuse carriers F4 and F5.

Courtesy of CMA/Flodyne/Hydradyne ▪ Motion Control ▪ Hydraulic ▪ Pneumatic ▪ Electrical ▪ Mechanical ▪ (800) 426-5480 ▪ www.cmafh.com

Courtesy of CMA/Flodyne/Hydradyne ▪ Motion Control ▪ Hydraulic ▪ Pneumatic ▪ Electrical ▪ Mechanical ▪ (800) 426-5480 ▪ www.cmafh.com

6 EMC Measures for Design and Installation

6.1 Rules for Design of Installations With Drive Controllers in Compliance With EMC

The following rules are the basics for designing and installing drives in compliance with EMC.

Mains Filter

Correctly use a mains filter recommended by Rexroth for radio interference suppression in the supply feeder of the drive system.

Control Cabinet Grounding

Connect all metal parts of the cabinet with one another over the largest possible surface area to establish a good electrical connection. This, too, applies to the mounting of the mains filter. If required, use serrated washers which cut through the paint surface. Connect the cabinet door to the control cabinet using the shortest possible grounding straps.

Line Routing

Avoid coupling routes between lines with high potential of noise and noise-free lines; therefore, signal, mains and motor lines and power cables have to be routed separately from another. Minimum distance: 10 cm. Provide separating sheets between power and signal lines. Ground separating sheets several times.

The lines with high potential of noise include:

- Lines at the mains connection (incl. synchronization connection)
- Lines at the motor connection

  Lines at the DC bus connection

Generally, interference injections are reduced by routing cables close to grounded sheet steel plates. For this reason, cables and wires should not be routed freely in the cabinet, but close to the cabinet housing or mounting panels. Separate the incoming and outgoing cables of the radio interference suppression filter.

Interference Suppression Elements

Provide the following components in the control cabinet with interference suppression combinations:

- Contactors
- Relays
- Solenoid valves
- Electromechanical operating hours counters

Connect these combinations directly at each coil.

Twisted Wires

Twist unshielded wires belonging to the same circuit (feeder and return cable) or keep the surface between feeder and return cable as small as possible. Wires that are not used have to be grounded at both ends.

Lines of Measuring Systems

Lines of measuring systems must be shielded. Connect the shield to ground at both ends and over the largest possible surface area. The shield may not be interrupted, e.g. using intermediate terminals.

Digital Signal Lines

Ground the shields of digital signal lines at both ends (transmitter **and** receiver) over the largest possible surface area and with low impedance. In the case of bad ground connection between transmitter and receiver, additionally route a bonding conductor (min. 10 mm^2). Braided shields are better than foil shields.

Analog Signal Lines

Ground the shields of analog signal lines at one end (transmitter **or** receiver) over the largest possible surface area and with low impedance. This avoids low-frequency interference current (in the mains frequency range) on the shield.

Courtesy of CMA/Flodyne/Hydradyne ▪ Motion Control ▪ Hydraulic ▪ Pneumatic ▪ Electrical ▪ Mechanical ▪ (800) 426-5480 ▪ www.cmafh.com

Connecting the Mains Choke

Keep connection lines of the mains choke at the drive controller as short as possible and twist them.

Installing the Motor Power Cable

- Use shielded motor power cables or run motor power cables in a shielded duct
- Use the shortest possible motor power cables
- Ground shield of motor power cable at both ends over the largest possible surface area to establish a good electrical connection
- Run motor lines in shielded form inside the control cabinet
- Do not use any steel-shielded lines
- The shield of the motor power cable mustn't be interrupted by mounted components, such as output chokes, sine filters or motor filters

6.2 EMC-Optimal Installation in Facility and Control Cabinet

6.2.1 General Information

For EMC-optimal installation, a spatial separation of the interference-free area (mains connection) and the interference-susceptible area (drive components) is recommended, as shown in the figures below.

☞ For EMC-optimal installation in the control cabinet, use a separate control cabinet panel for the drive components.

6.2.2 Division Into Areas (Zones)

Exemplary arrangements in the control cabinet: See section Control Cabinet Mounting According to Interference Areas - Exemplary Arrangements, page 49.

We distinguish three areas:

1. Interference-free area of control cabinet **(area A)**:

   This includes:

   - Supply feeder, input terminals, fuse, main switch, mains side of mains filter for drives and corresponding connecting lines
   - Control voltage or auxiliary voltage connection with power supply unit, fuse and other parts unless connection is run via the mains filter of the AC drives
   - All components that are not electrically connected with the drive system
2. Interference-susceptible area **(area B)**:
   - Mains connections between drive system and mains filter for drives, mains contactor
   - Interface lines of drive controller
3. Strongly interference-susceptible area **(area C)**:
   - Motor power cables including single cores

Never run lines of one of these areas in parallel with lines of another area so that there isn't any unwanted interference injection from one area to the other and that the filter is jumpered with regard to high frequency. Use the shortest possible connecting lines.

Recommendation for complex systems: Install drive components in one cabinet and the control units in a second, separate cabinet.

Badly grounded control cabinet doors act as antennas. Therefore, connect the control cabinet doors to the cabinet on top, in the middle and on the bottom via short equipment grounding conductors with a cross section of at least 6 mm^2 or, even better, via grounding straps with the same cross section. Make sure connection points have good contact.

6.2.3 Control Cabinet Mounting According to Interference Areas - Exemplary Arrangements

Supply Units With Regeneration

☞ **Do not operate any additional loads at the mains filter!**

Do not operate any other loads at the connection from the mains filter output to the mains connection of the supply unit.

For motor blowers and power supply units, for example, use separate mains filters.

Courtesy of CMA/Flodyne/Hydradyne ▪ Motion Control ▪ Hydraulic ▪ Pneumatic ▪ Electrical ▪ Mechanical ▪ (800) 426-5480 ▪ www.cmafh.com

Courtesy of CMA/Flodyne/Hydradyne ▪ Motion Control ▪ Hydraulic ▪ Pneumatic ▪ Electrical ▪ Mechanical ▪ (800) 426-5480 ▪ www.cmafh.com

EMC Measures for Design and Installation

Regenerative Supply Unit

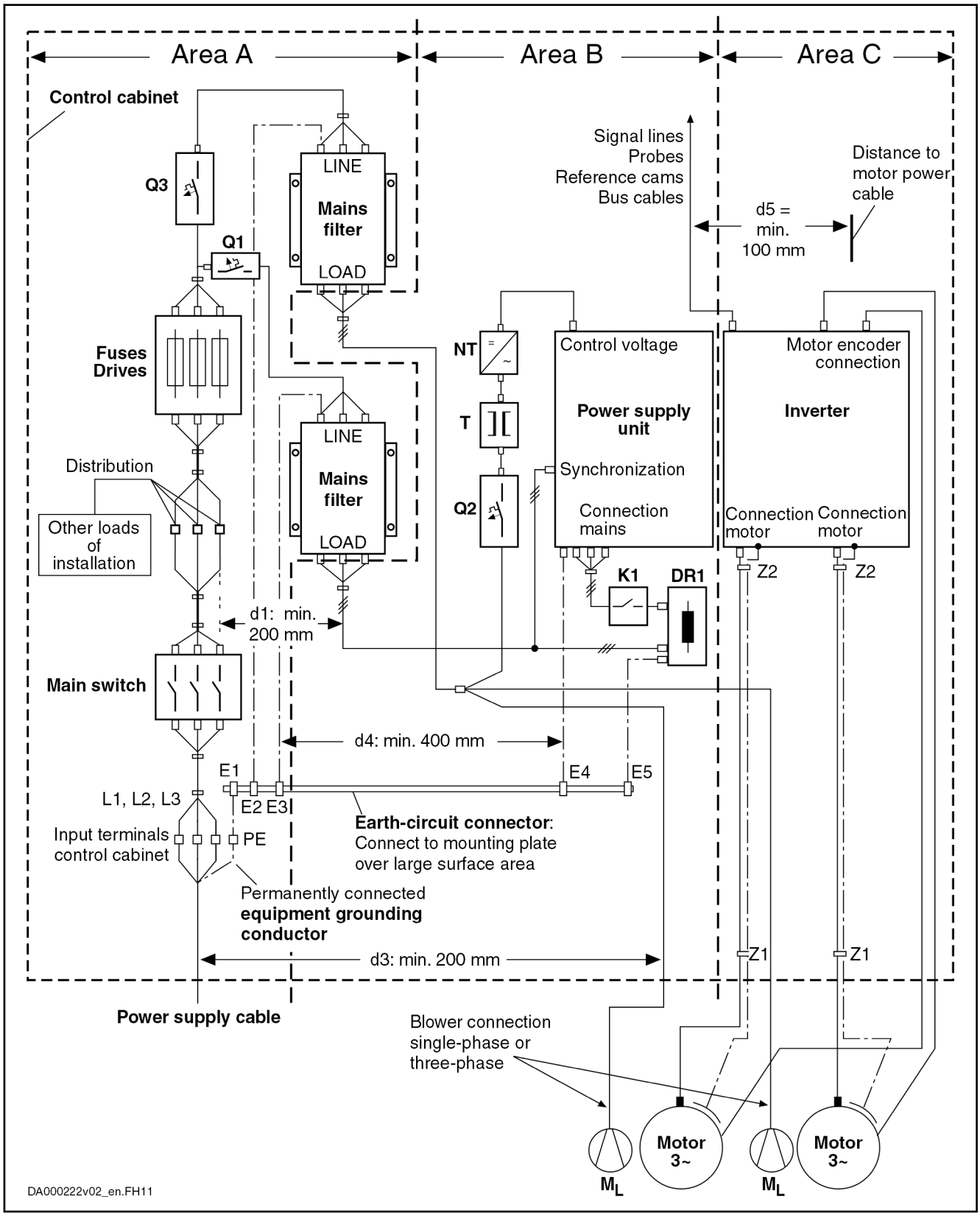

Courtesy of CMA/Flodyne/Hydradyne ▪ Motion Control ▪ Hydraulic ▪ Pneumatic ▪ Electrical ▪ Mechanical ▪ (800) 426-5480 ▪ www.cmafh.com

DR1	Mains choke
E1…E5	Equipment grounding conductor of the components
K1	External mains contactor for supply units without integrated mains contactor
M_L	Motor blower
NT	Power supply unit
Q1, Q2, Q3	Fusing
T	Transformer
Z1, Z2	Shield connection points for cables

Fig.6-1: Regenerative Supply Unit – EMC Areas in the Control Cabinet

Courtesy of CMA/Flodyne/Hydradyne ▪ Motion Control ▪ Hydraulic ▪ Pneumatic ▪ Electrical ▪ Mechanical ▪ (800) 426-5480 ▪ www.cmafh.com

EMC Measures for Design and Installation

Infeeding Supply Unit or Converter

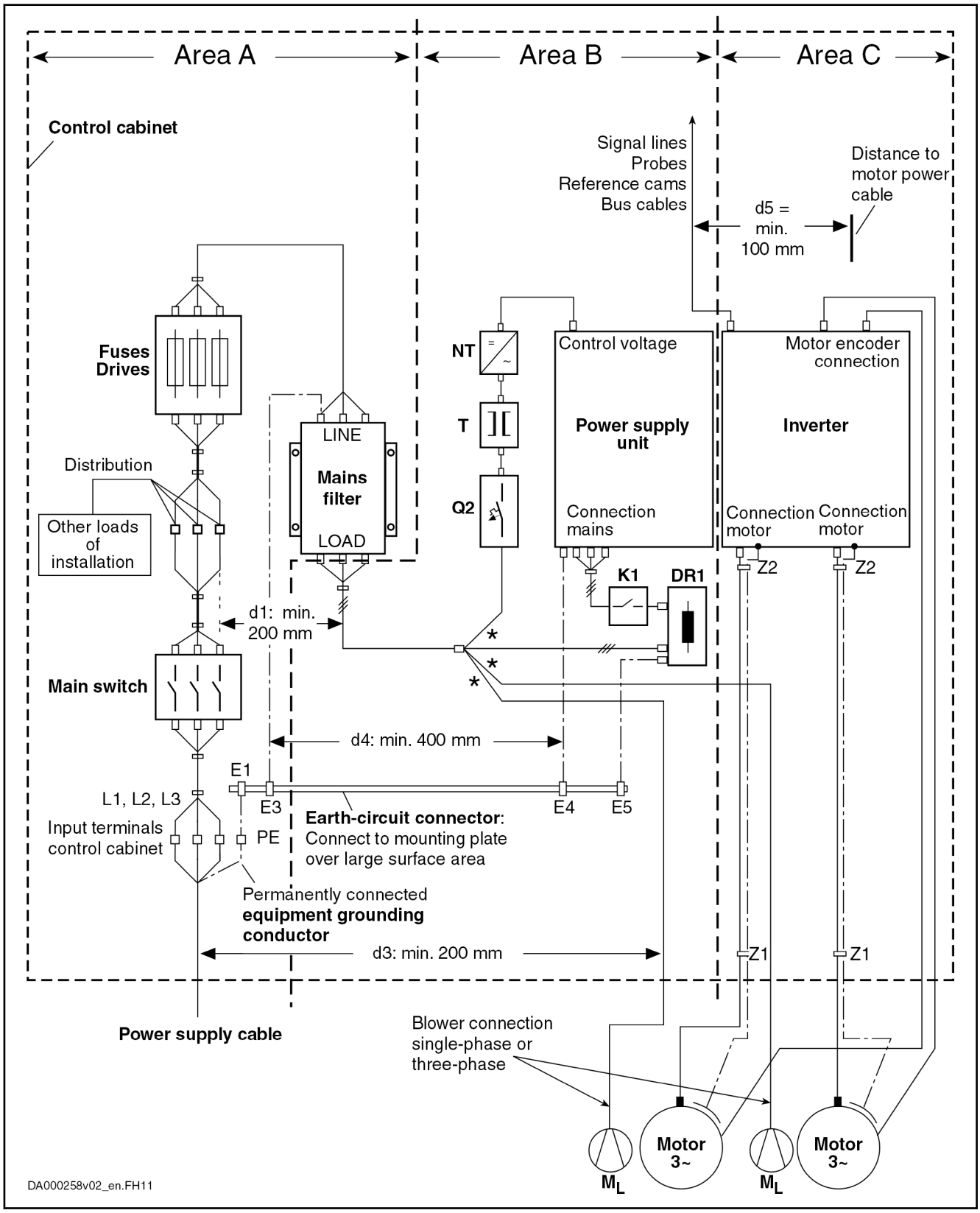

DR1	Mains choke (optional)
E1…E5	Equipment grounding conductor of the components
K1	External mains contactor for supply units and converters without integrated mains contactor
M_L	Motor blower
NT	Power supply unit
Q2	Fusing
T	Transformer
Z1, Z2	Shield connection points for cables
*	Not allowed at HNF mains filter

Fig.6-2: Infeeding Supply Unit or Converter – EMC Areas in the Control Cabinet

6.2.4 Design and Installation in Area A - Interference-Free Area of Control Cabinet

Arranging the Components in the Control Cabinet

Comply with a distance of at least **200 mm** (distance d1 in the figure):

- Between components and electrical elements (switches, pushbuttons, fuses, terminal connectors) in the interference-free area A and the components in the two other areas B and C

Comply with a distance of at least **400 mm** (distance d4 in the figure):

- Between magnetic components (such as transformers, mains chokes and DC bus chokes that are directly connected to the power connections of the drive system) and the interference-free components and lines between mains and filter including the mains filter in area A

If these distances are not kept, the magnetic leakage fields are injected to the interference-free components and lines connected to the mains and the limit values at the mains connection are exceeded in spite of the installed filter.

Cable Routing of the Interference-Free Lines to the Mains Connection

Comply with a distance of at least **200 mm** (distance d1 and d3 in the figure):

- Between supply feeder or lines between filter and exit point from the control cabinet in area A and the lines in area B and C

If this is impossible, there are two alternatives:

1. Install lines in shielded form and connect the shield at several points (at least at the beginning and at the end of the line) to the mounting plate or the control cabinet housing over a large surface area.
2. Separate lines from the other interference-susceptible lines in areas B and C by means of a grounded distance plate vertically attached to the mounting plate.

Install the shortest possible lines within the control cabinet and install them directly on the grounded metal surface of the mounting plate or of the control cabinet housing.

Mains supply lines from areas B and C must not be connected to the mains without a filter.

☞ In case you do not observe the information on cable routing given in this section, the effect of the mains filter is totally or partly neutralized. This will cause the noise level of the interference emission to be higher within the range of 150 kHz to 40 MHz and the limit values at the connection points of the machine or installation will thereby be exceeded.

Routing and Connecting a Neutral Conductor (N)

If a neutral conductor is used together with a three-phase connection, it must not be installed unfiltered in zones B and C, in order to keep interference off the mains.

Courtesy of CMA/Flodyne/Hydradyne ▪ Motion Control ▪ Hydraulic ▪ Pneumatic ▪ Electrical ▪ Mechanical ▪ (800) 426-5480 ▪ www.cmafh.com

Courtesy of CMA/Flodyne/Hydradyne ▪ Motion Control ▪ Hydraulic ▪ Pneumatic ▪ Electrical ▪ Mechanical ▪ (800) 426-5480 ▪ www.cmafh.com

EMC Measures for Design and Installation

Motor Blower at Mains Filter

Single-phase or three-phase supply lines of motor blowers, that are usually routed in parallel with motor power cables or interference-susceptible lines, must be filtered:

- In drive systems with **regenerative supply units**, via a separate single-phase (NFE type) or three-phase filter (HNF type) near the mains connection of the control cabinet
- In drive systems with **only infeeding supply units**, via the available three-phase filter of the drive system

When switching power off, make sure the blower is not switched off.

Loads at Mains Filter of Drive System

☞ **Only operate allowed loads at the mains filter of the drive system!**

At the three-phase filter for the power connection of regenerative supply units, it is only allowed to operate the following loads:

- HMV supply unit with mains choke and, if necessary, mains contactor

Do not operate any motor blowers, power supply units etc. at the mains filter of the drive system.

Shielding Mains Supply Lines in Control Cabinet

If there is a high degree of interference injection to the mains supply line within the control cabinet, although you have observed the above instructions (to be found out by EMC measurement according to standard), proceed as follows:

- Only use shielded lines in area A
- Connect shields to the mounting plate at the beginning and the end of the line by means of clips

The same procedure may be required for long cables of more than 2 m between the point of power supply connection of the control cabinet and the filter within the control cabinet.

Mains Filters for AC Drives

Ideally, mount the mains filter on the parting line between area A and B. Make sure the ground connection between filter housing and housing of the drive controllers has good electrically conductive properties.

If **single-phase** loads are connected on the load side of the filter, their current may be a maximum of 10% of the three-phase operating current. A highly imbalanced load of the filter would deteriorate its interference suppression capacity.

If the mains voltage is more than 480 V, connect the filter to the output side of the transformer and not to the supply side of the transformer.

Grounding

In the case of bad ground connections in the installation, the distance between the lines to the grounding points E1, E2 in area A and the other grounding points of the drive system should be at least d4 = 400 mm, in order to minimize interference injection from ground and ground cables to the power input lines.

See also 6.2.2 Division Into Areas (Zones), page 48.

Point of Connection for Equipment Grounding Conductor at Machine, Installation, Control Cabinet

The equipment grounding conductor of the power cable of the machine, installation or control cabinet has to be **permanently connected** at point PE and have a **cross section of at least 10 mm²** or to be complemented by a second equipment grounding conductor via separate terminal connectors (according to EN 61800-5-1:2007, section 4.3.5.5.2). If the cross section of the outer conductor is bigger, the cross section of the equipment grounding conductor must be accordingly bigger.

Courtesy of CMA/Flodyne/Hydradyne ▪ Motion Control ▪ Hydraulic ▪ Pneumatic ▪ Electrical ▪ Mechanical ▪ (800) 426-5480 ▪ www.cmafh.com

6.2.5 Design and Installation in Area B - Interference-Susceptible Area of Control Cabinet

Arranging Components and Lines

Modules, components and lines in area B should be placed at a distance of at least **d1 = 200 mm** from modules and lines in area A.

Alternative: Shield modules, components and lines in area B by distance plates mounted vertically on the mounting plate from modules and lines in area A or use shielded lines.

Only connect power supply units for auxiliary or control voltage connections in the drive system to the mains via a mains filter. See 6.2.2 Division Into Areas (Zones), page 48.

Install the shortest possible lines between drive controller and filter.

Control Voltage or Auxiliary Voltage Connection

Only in exceptional cases should you connect power supply unit and fusing for the control voltage connection to phase and neutral conductor. In this case, mount and install these components in area A far away from the areas B and C of the drive system. For details see section 6.2.4 Design and Installation in Area A - Interference-Free Area of Control Cabinet, page 53.

Run the connection between control voltage connection of the drive system and power supply unit used through area B over the shortest distance.

Line Routing

Run the lines along grounded metal surfaces, in order to minimize radiation of interference fields to area A (transmitting antenna effect).

6.2.6 Design and Installation in Area C - Strongly Interference-Susceptible Area of Control Cabinet

Area C mainly concerns the motor power cables, especially at the connection point at the drive controller.

Influence of the Motor Power Cable

The longer the motor power cable, the greater its leakage capacitance. To comply with a certain EMC limit value, the allowed leakage capacitance of the mains filter is limited. For the calculation of the leakage capacitance, see the documentation on the drive system of the drive controller used.

☞
- Run the shortest possible motor power cables.
- Only use **shielded** motor power cables by Rexroth.

6.3 Ground Connections

Housing and Mounting Plate

By means of appropriate ground connections, it is possible to avoid the emission of interference, because interference is discharged to ground on the shortest possible way.

Ground connections of the metal housings of EMC-critical components (such as filters, devices of the drive system, connection points of the cable shields, devices with microprocessor and switching power supply units) have to be well contacted over a large surface area. This also applies to all screw connections between mounting plate and control cabinet wall and to the mounting of a ground bus to the mounting plate.

The best solution is to use a zinc-coated mounting plate. Compared to a lacquered plate, the connections in this case have a good long-time stability.

Connection Elements

For lacquered mounting plates, always use screw connections with tooth lock washers and zinc-coated, tinned screws as connection elements. At the connection points, remove the lacquer so that there is safe electrical contact over a large surface area. You achieve contact over a large surface area by means of bare connection surfaces or several connection screws. For screw

Courtesy of CMA/Flodyne/Hydradyne ▪ Motion Control ▪ Hydraulic ▪ Pneumatic ▪ Electrical ▪ Mechanical ▪ (800) 426-5480 ▪ www.cmafh.com

connections, you can establish the contact to lacquered surfaces by using tooth lock washers.

Metal Surfaces

Always use connection elements (screws, nuts, plain washers) with good electroconductive surface.

Bare zinc-coated or tinned metal surfaces have **good electroconductive properties**.

Anodized, yellow chromatized, black gunmetal finish or lacquered metal surfaces have **bad electroconductive properties**.

Ground Wires and Shield Connections

For connecting ground wires and shield connections, it is not the cross section but the size of contact surface that is important, as the high-frequency interference currents mainly flow on the surface of the conductor.

Always connect cable shields, especially shields of the motor power cables, to ground potential over a large surface area.

6.4 Installing Signal Lines and Signal Cables

Line Routing

For measures to prevent interference, see the Project Planning Manuals of the respective device. In addition, we recommend the following measures:

- Route signal and control lines separately from the power cables with a minimum distance of **d5 = 100 mm** (see 6.2.2 Division Into Areas (Zones), page 48) or with a grounded separating sheet. The optimum way is to route them in separate cable ducts. If possible, lead signal lines into the control cabinet at one point only.
- If signal lines are crossing power cables, route them in an angle of 90° in order to avoid interference injection.
- Ground spare cables, that are not used and have been connected, at least at both ends so that they do not have any antenna effect.
- Avoid unnecessary line lengths.
- Run cables as close as possible to grounded metal surfaces (reference potential). The ideal solution are closed, grounded cable ducts or metal pipes which, however, is only obligatory for high requirements (sensitive instrument leads).
- Avoid suspended lines or lines routed along synthetic carriers, because they are functioning like reception antennas (noise immunity) and like transmitting antennas (emission of interference). Exceptional cases are flexible cable tracks over short distances of a maximum of 5 m.

Shielding

Connect the cable shield immediately at the devices in the shortest and most direct possible way and over the largest possible surface area.

Connect the shield of **analog signal lines** at one end over a large surface area, normally in the control cabinet at the analog device. Make sure the connection to ground/housing is short and over a large surface area.

Connect the shield of **digital signal lines** at both ends over a large surface area and in short form. In the case of potential differences between beginning and end of the line, run an additional bonding conductor in parallel. This prevents compensating current from flowing via the shield. The guide value for the cross section is 10 mm^2.

You absolutely have to equip separable connections with connectors with grounded metal housing.

In the case of non-shielded lines belonging to the same circuit, twist feeder and return cable.

6.5 General Measures of Radio Interference Suppression for Relays, Contactors, Switches, Chokes and Inductive Loads

If, in conjunction with electronic devices and components, inductive loads, such as chokes, contactors, relays are switched by contacts or semiconductors, appropriate interference suppression has to be provided for them:

- By arranging free-wheeling diodes in the case of d.c. operation
- In the case of a.c. operation, by arranging usual RC interference suppression elements depending on the contactor type, immediately at the inductance

Only the interference suppression element arranged immediately at the inductance does serve this purpose. Otherwise, the emitted noise level is too high which can affect the function of the electronic system and of the drive.

If possible, mechanical switches and contacts should only be realized as snap contacts. Contact pressure and contact material must be suited for the corresponding switching currents.

Slow-action contacts should be replaced by snap switches or by solid-state switches, because slow-action contacts strongly bounce and are in an undefined switching status for a long time which emits electromagnetic waves in the case of inductive loads. These waves are an especially critical aspect in the case of manometric or temperature switches.

Courtesy of CMA/Flodyne/Hydradyne ▪ Motion Control ▪ Hydraulic ▪ Pneumatic ▪ Electrical ▪ Mechanical ▪ (800) 426-5480 ▪ www.cmafh.com

Courtesy of CMA/Flodyne/Hydradyne ▪ Motion Control ▪ Hydraulic ▪ Pneumatic ▪ Electrical ▪ Mechanical ▪ (800) 426-5480 ▪ www.cmafh.com

7 Accessories

7.1 Overview

Overview	Content and usage
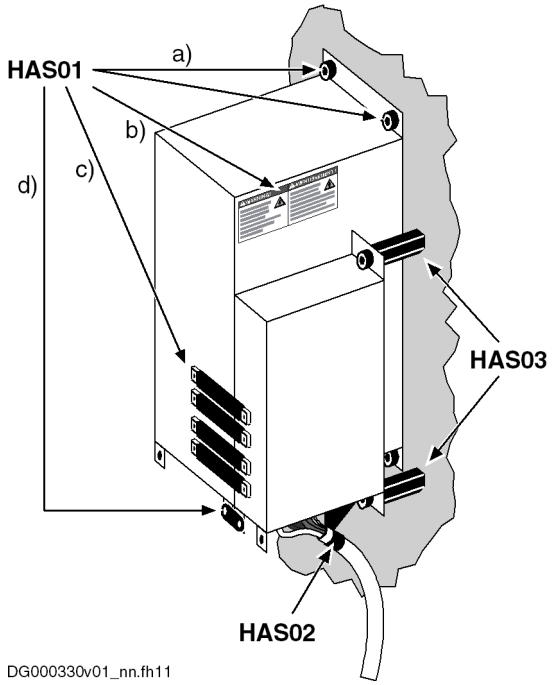	Accessory **HAS01** contains: **a)** Screws to fix the device in the control cabinet **b)** Adhesive labels with notes on safety in the English and French languages. Place the adhesive labels clearly visibly at the device or in the immediate vicinity of the device, if the adhesive labels existing at the device are hidden by neighboring devices. **c)** Contact bars for connecting • the DC bus • the control voltage supply • For high-performance devices, there are additional elements which increase the current carrying capacity of the DC bus connections and which are screwed to the contact bars: 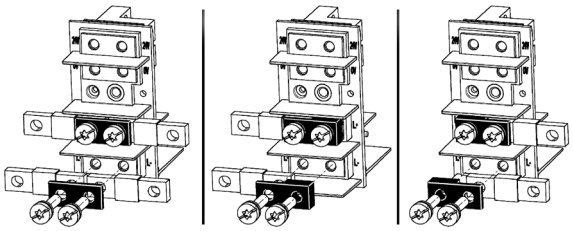 **d)** Joint bar to connect the equipment grounding connections of neighboring devices
	The accessory **HAS02** is screwed to the bottom of the device and used to • connect the motor cable shield to the device • provide strain relief of the motor cable
	The accessory **HAS03** (control cabinet adapter) is used to compensate different mounting depths of devices mounted to a common mounting surface. • Maximum allowed tightening torque: **6 Nm** • Mechanical stability of a device with HAS03 requires the rigid connection via DC bus contact bars to a neighboring device without HAS03.

Fig.7-1: Accessories – Overview

Courtesy of CMA/Flodyne/Hydradyne ▪ Motion Control ▪ Hydraulic ▪ Pneumatic ▪ Electrical ▪ Mechanical ▪ (800) 426-5480 ▪ www.cmafh.com

Courtesy of CMA/Flodyne/Hydradyne ▪ Motion Control ▪ Hydraulic ▪ Pneumatic ▪ Electrical ▪ Mechanical ▪ (800) 426-5480 ▪ www.cmafh.com

7.2 Information on Accessory HAS02

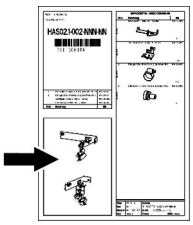	The supplied product insert shows how the parts of the accessory are arranged.

Fig.7-2: Product Insert

Mounting Example Accessory HAS02.1-002

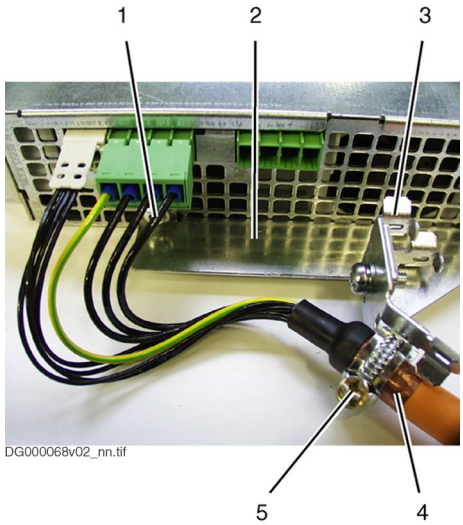

1	Screw in thread at bottom of device
2	Fixing device
3	Shielding plate
4	Shield of motor cable
5	Clip

Fig.7-3: Strain Relief and Shield Connection of Motor Cable

How to mount the accessory

1. Unscrew bottom mounting screw of device.
2. Put fixing device to bottom of device and screw down mounting screw of device again.
3. Screw supplied screw in thread at bottom of device.
4. Screw shielding plate to fixing device according to desired cable routing of motor cable. (The figure illustrates cable routing with 45°.)
5. According to diameter of motor cable, fix motor cable at corresponding point of shielding plate with a clip. Make sure that shield of motor cable has good contact with shielding plate.

The mounting of the accessory is similar for all devices. Exception: With HAS02.1-010 (at HMS02.1N-W0028 / 54), the fixing device is screwed to the equipment grounding conductor connections of the device.

8 Service and Support

Our worldwide service network provides an optimized and efficient support. Our experts offer you advice and assistance should you have any queries. You can contact us **24/7**.

Service Germany

Our technology-oriented Competence Center in Lohr, Germany, is responsible for all your service-related queries for electric drive and controls.

Contact the **Service Helpdesk & Hotline** under:

Phone:	**+49 9352 40 5060**
Fax:	**+49 9352 18 4941**
E-mail:	service.svc@boschrexroth.de
Internet:	http://www.boschrexroth.com

Additional information on service, repair (e.g. delivery addresses) and training can be found on our internet sites.

Service worldwide

Outside Germany, please contact your local service office first. For hotline numbers, refer to the sales office addresses on the internet.

Preparing information

To be able to help you more quickly and efficiently, please have the following information ready:

- Detailed description of malfunction and circumstances resulting in the malfunction
- Type plate name of the affected products, in particular type codes and serial numbers
- Your contact data (phone and fax number as well as your email address)

Courtesy of CMA/Flodyne/Hydradyne ▪ Motion Control ▪ Hydraulic ▪ Pneumatic ▪ Electrical ▪ Mechanical ▪ (800) 426-5480 ▪ www.cmafh.com

Courtesy of CMA/Flodyne/Hydradyne ▪ Motion Control ▪ Hydraulic ▪ Pneumatic ▪ Electrical ▪ Mechanical ▪ (800) 426-5480 ▪ www.cmafh.com

Courtesy of CMA/Flodyne/Hydradyne ▪ Motion Control ▪ Hydraulic ▪ Pneumatic ▪ Electrical ▪ Mechanical ▪ (800) 426-5480 ▪ www.cmafh.com

9 Environmental Protection and Disposal

9.1 Environmental Protection

Production Processes

The products are made with energy- and resource-optimized production processes which allow re-using and recycling the resulting waste. We regularly try to replace pollutant-loaded raw materials and supplies by more environment-friendly alternatives.

No Release of Hazardous Substances

Our products do not contain any hazardous substances which may be released in the case of appropriate use. Normally, our products will not have any negativ influences on the environment.

Significant Components

Basically, our products contain the following components:

Electronic devices
- steel
- aluminum
- copper
- synthetic materials
- electronic components and modules

Motors
- steel
- aluminum
- copper
- brass
- magnetic materials
- electronic components and modules

9.2 Disposal

Return of Products

Our products can be returned to our premises free of charge for disposal. It is a precondition, however, that the products are free of oil, grease or other dirt.

Furthermore, the products returned for disposal must not contain any undue foreign material or foreign components.

Send the products ”free domicile” to the following address:

Bosch Rexroth AG
Electric Drives and Controls
Buergermeister-Dr.-Nebel-Strasse 2
97816 Lohr am Main, Germany

Packaging

The packaging materials consist of cardboard, wood and polystyrene. These materials can be recycled anywhere without any problem.

For ecological reasons, please refrain from returning the empty packages to us.

Batteries and Accumulators

Batteries and accumulators can be labeled with this symbol.

The symbol indicating "separate collection" for all batteries and accumulators is the crossed-out wheeled bin.

The end user within the EU is legally obligated to return used batteries. Outside the validity of the EU Directive 2006/66/EC keep the stipulated directives.

Used batteries can contain hazardous substances, which can harm the environment or the people´s health when they are improper stored or disposed of.

After use, the batteries or accumulators contained in Rexroth products have to be properly disposed of according to the country-specific collection.

Recycling

Most of the products can be recycled due to their high content of metal. In order to recycle the metal in the best possible way, the products must be disassembled into individual modules.

Courtesy of CMA/Flodyne/Hydradyne ▪ Motion Control ▪ Hydraulic ▪ Pneumatic ▪ Electrical ▪ Mechanical ▪ (800) 426-5480 ▪ www.cmafh.com

Environmental Protection and Disposal

Metals contained in electric and electronic modules can also be recycled by means of special separation processes.

Products made of plastics can contain flame retardants. These plastic parts are labeled according to EN ISO 1043. They have to be recycled separately or disposed of according to the valid legal requirements.

10 Appendix

10.1 Digital Inputs and Outputs

10.1.1 Digital Inputs (Safety Technology "L Options")

The digital inputs correspond to IEC 61131, type 2.

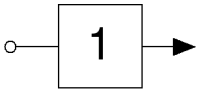

Fig. 10-1: Symbol

Data	Unit	Min.	Typ.	Max.
Allowed input voltage	V	0		30
On	V	11		
Off	V			5
Input current				
On	mA	7		
Off	mA			2
Input resistance	kΩ	1 … 3,5		

Fig. 10-2: Digital Inputs (Safety Technology "L Options")

10.1.2 Digital Outputs (Safety Technology "L Options")

The digital outputs are compatible with digital inputs of types 1, 2 and 3 (IEC 61131).

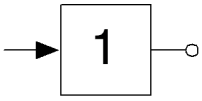

Fig. 10-3: Symbol

Data	Unit	Min.	Typ.	Max.
Output voltage ON	V	11	24	30
Output voltage OFF	V			5
Output current OFF	mA			2
Allowed output current per output	mA			300
Short circuit protection		Available		
Overload protection		Available		

Fig. 10-4: Digital Outputs (Safety Technology "L Options")

Courtesy of CMA/Flodyne/Hydradyne ▪ Motion Control ▪ Hydraulic ▪ Pneumatic ▪ Electrical ▪ Mechanical ▪ (800) 426-5480 ▪ www.cmafh.com

Courtesy of CMA/Flodyne/Hydradyne ▪ Motion Control ▪ Hydraulic ▪ Pneumatic ▪ Electrical ▪ Mechanical ▪ (800) 426-5480 ▪ www.cmafh.com

Index

Symbols
24V supply 37

A
Accessories
HAS01, HAS02, HAS03 59
Accumulators 63
Additional documentations 25

B
Batteries 63

C
Cables
Documentation 26
Components
Documentations 25
Connection
DC bus 38
Ground 37
Connection diagram 34
Connection point
Equipment grounding conductor 36
Connection points 29
Contained substances
see "Significant components" 63
Control cabinet
Area A, interference-free 53
Area B, interference-susceptible 55
Area C, strongly interference-susceptible 55
Interference areas 49
Control voltage 37

D
DC bus
Connection 38
Diagnostic display
KCU02 (LED H49, H52.1…H54) 43
Digital inputs
Technical data; safety technology "L options" 65
Digital outputs
Technical data; safety technology "L options" 65
Dimensions 23
Disposal 63
Distances 24
Documentation
Additional documentations 25
Cables 26
Drive systems 25
Firmware 26
Motors 25

D
...Documentation
Overview 25
System components 25

E
EMC
Measures for design and installation 47
Environmental protection 63
Equipment grounding conductor
Connection point 36

F
F4, F5
Fuses 35
Replacing fuses 44
Firmware
Documentation 26
Fuses
F4, F5 35
Replacing 44

G
Ground connection 37
Ground connections 55

H
H49, H52.1…H54
LEDs (KCU02) 43
HAS01, HAS02, HAS03
Accessories 59
Hazardous substances 63

I
Identification 21
Installation 42
EMC measures 47
General information 42
Ground connections 55
Signal lines 56
Instructions for use 27

K
KCU02
Connection points 35
LEDs 43
Touch guard 27

L
L+, L- 38

Courtesy of CMA/Flodyne/Hydradyne ▪ Motion Control ▪ Hydraulic ▪ Pneumatic ▪ Electrical ▪ Mechanical ▪ (800) 426-5480 ▪ www.cmafh.com

Courtesy of CMA/Flodyne/Hydradyne ▪ Motion Control ▪ Hydraulic ▪ Pneumatic ▪ Electrical ▪ Mechanical ▪ (800) 426-5480 ▪ www.cmafh.com

Index

L
L3
Safe Torque Off 41
LED
H49, H52.1…H54 (KCU02) 43

M
Mains filter
Motor blower 54
Other loads 54
Measures of radio interference suppression
For relays, contactors, switches, chokes, inductive loads 57
Motor
Documentation 25
Motor blower
Mains filter 54

P
Packaging..... 63
Power consumption..... 23
Production processes..... 63
Project planning manuals..... 25

R
Ratings..... 23
Recycling..... 63
Return of products..... 63

S
Safe Torque Off
L3 41
X49 41
Safety instructions..... 13
Safety technology
L3 (Safe Torque Off) 41

S
Scope of supply..... 22
Signal lines
Installation 56
Significant components..... 63
Support
See service hotline 61

T
Technical data
Digital inputs; safety technology "L options" . 65
Digital outputs; safety technology "L options" 65
Touch Guard
KCU02 27
Type code..... 21
Type plates..... 22

U
Use
Instructions 27

V
Voltage load capacity..... 23

W
Wiring diagram
With HCS02 30
With HCS03 31
With HMV01 29
With HMV02 33

X
X49
Safe Torque Off 41

Courtesy of CMA/Flodyne/Hydradyne ▪ Motion Control ▪ Hydraulic ▪ Pneumatic ▪ Electrical ▪ Mechanical ▪ (800) 426-5480 ▪ www.cmafh.com

Notes

Courtesy of CMA/Flodyne/Hydradyne ▪ Motion Control ▪ Hydraulic ▪ Pneumatic ▪ Electrical ▪ Mechanical ▪ (800) 426-5480 ▪ www.cmafh.com

Rexroth
Bosch Group

Bosch Rexroth AG
Electric Drives and Controls
P.O. Box 13 57
97803 Lohr, Germany
Bgm.-Dr.-Nebel-Str. 2
97816 Lohr, Germany
Tel. +49 9352 18 0
Fax +49 9352 18 8400
www.boschrexroth.com/electrics

R911335787

DOK-INDRV*-KCU02*UL***-IN01-EN-P